Park position - EV-T2CCS-PARK - 1624153

Please be informed that the data shown in this PDF Document is generated from our Online Catalog. Please find the complete data in the user's Use for Downloads are valid



Retainer for Vehicle Connector as parking position at charging stations (EVSE), CCS type 2, IEC 62196-3, Front mounting

Product Description

Retainer for Vehicle Connector as parking position at charging stations for E-Mobility (EVSE)

Why buy this product

Certified in accordance with IATF 16949:2016 and ISO 9001:2015

RoHS

Key Commercial Data

Packing unit	1 STK
GTIN	4 055626 242873
GTIN	4055626242873

Technical data

Product definition

Product type	Retainer for Vehicle Connector as parking position at charging stations (EVSE)
Standards/regulations	IEC 62196-3
Charging standard	CCS type 2
Charging mode	Mode 4

Dimensions

Height	118 mm
Width	75 mm
Depth	54 mm
Bore dimensions	60 mm x 103 mm

Ambient conditions

Ambient temperature (operation)	-30 °C ... 50 °C
Ambient temperature (storage/transport)	-40 °C ... 80 °C

Park position - EV-T2CCS-PARK - 1624153

Technical data

Ambient conditions

Degree of protection	IP54

Mechanical properties

Vehicle Connector fixing	With locking clips for locking contour
Removal of the Vehicle Connector	Lifting and removal
Detection of the Vehicle Connector	On request

Mounting

Possible mounting positions	Front mounting
Restrictions to mounting position	Only 0 to 45 degree frontal inclination possible, see figure
Mounting hole diameter	6.00 mm (ø)

Design

Housing color	black
Customer variations	On request

Material

Material	Plastic
Flammability rating	V0

Environmental Product Compliance

China RoHS	Environmentally friendly use period: unlimited = EFUP-e
	No hazardous substances above threshold values

Drawings

Schematic diagram

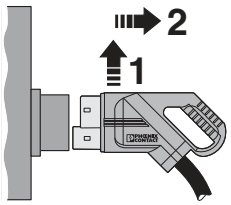

The attached DC Vehicle Connector is raised in the holder, releasing it from the integrated locking clip, and it can then be removed.

Dimensional drawing

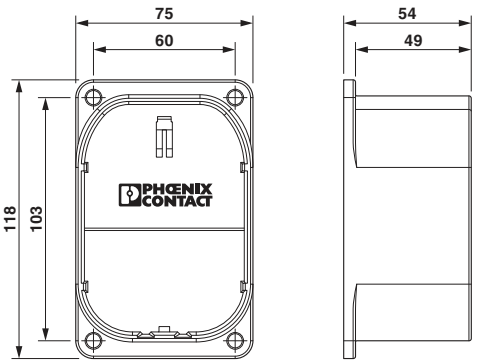

Dimensional drawing