Liebert® MicroPOD™ 120V

Installer/User Guide

Technical Support Site

If you encounter any installation or operational issues with your product, check the pertinent section of this manual to see if the issue can be resolved by following outlined procedures. Visit

TABLE OF CONTENTS

1 Important Safety Instructions **4**
2 Glossary of Symbols **6**
3 Introduction and System Description **7**
3.1 System Description 7
4 Installation **9**
4.1 Installation on a Liebert GXT UPS 9
4.2 Rack Mount Installation 10
5 Startup Procedure **12**
5.1 Electrical Connections 12
5.2 Pluggable Connections 12
5.3 Hardwire Connections 13
6 Indicator Lamps **16**
6.1 Utility Indicator Lamp 16
6.2 UPS Indicator Lamp 16
7 Operation **17**
7.1 Transfer to Maintenance Bypass 17
7.2 Transfer to UPS 17
8 Specifications **18**
9 Troubleshooting **21**
Appendices **23**
Appendix A: Technical Support 23

1 IMPORTANT SAFETY INSTRUCTIONS

WARNING! Do not attempt to service this product yourself. Opening or removing the cover may expose you to dangerous voltages, even when the AC cord is disconnected from the electrical outlet. Refer all servicing to qualified service personnel.

SAVE THESE INSTRUCTIONS

This manual contains important instructions that should be followed during installation and operation of the Liebert MicroPOD.

This product is not intended for use with life support or other U.S. FDA designated “critical” devices.

Read all safety and operating instructions before operating the Liebert MicroPOD and the connected UPS system. Adhere to all warnings on the unit and in this manual. Follow all operating and user instructions.

Turn the UPS off and unplug the Liebert MicroPOD before cleaning. Use only a soft cloth, never liquid or aerosol cleaners.

The UPS and Liebert MicroPOD are designed for data processing equipment. Do not plug laser printers or appliances, such as hair dryers, heaters, vacuum cleaners or electric drills, into the UPS output receptacles.

WARNING! Do not modify the cables in any way. Consult your local Emerson representative if the AC cords do not match the utility receptacle. The Liebert MicroPOD must be grounded at all times while in use. Turn Off the UPS before unplugging Liebert MicroPOD.

The UPS and the Liebert MicroPOD are equipped with grounded plugs (plug types vary depending on model). Do not defeat the safety purpose of this plug. If unable to fully insert the plug into the designated receptacle, contact a qualified electrician or your local dealer or Emerson representative for assistance.

Route power supply cords so they are not walked on or pinched in anyway.

CAUTION: Risk of electric shock, do not remove cover, no user serviceable parts inside. Refer servicing to qualified service personnel.

CAUTION: This device receives power from multiple sources. Before servicing this device, remove all connections. Before servicing the UPS, follow “Maintenance of UPS” instructions in the user manual for your UPS.

CAUTION: For use in a controlled environment. Refer to manual specifications for environmental conditions.

WARNING! When the Liebert MicroPOD is in Utility position (maintenance bypass mode), the power to the connected load is not filtered or conditioned by the UPS.

2 GLOSSARY OF SYMBOLS

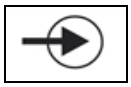

Indicates AC Input.

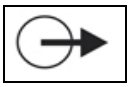

Indicates AC Output.

Consult the manual for additional information.

Utility lamp indicates local power is available and the load may be transferred to bypass the UPS.

UPS lamp indicates UPS power is available and the load may be transferred to the UPS to provide computer-grade power to the load.

3 INTRODUCTION AND SYSTEM DESCRIPTION

The Liebert MicroPOD provides maintenance bypass capability as well as power output distribution. The Liebert MicroPOD can be used on UPSs in either rack mount or tower configuration.

The Liebert MicroPOD provides an isolated path of power for your UPS system for preventive maintenance or service.

3.1 System Description

The Liebert MicroPOD has two modes of operation: UPS (UPS available) and UTILITY (maintenance bypass).

- In UPS mode, the power is routed through the UPS system delivering conditioned power to the load, as shown in Figure 2.1 below.

Figure 2.1 UPS mode of operation

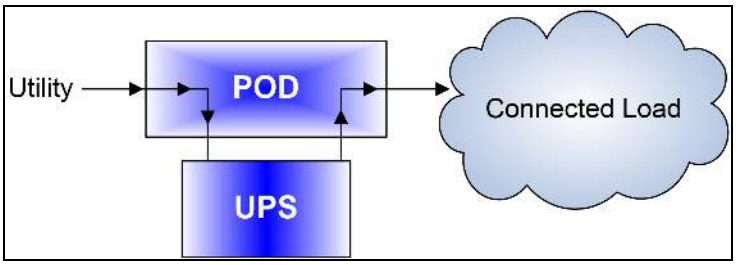

- In Utility mode, power is routed around (bypassing) the UPS system (see Figure 2.2 below). Utility power is supplied directly to the load through the Liebert MicroPOD.

NOTE: Battery backup and conditioned power are NOT available during the Utility mode of operation.

Figure 2.2 Utility/maintenance bypass mode

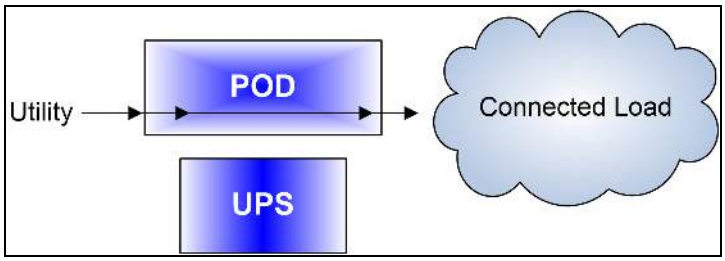

- The UPS may be turned off and removed without affecting the load. See Figure 2.3 on the next page.

Figure 2.3 Liebert MicroPOD connections

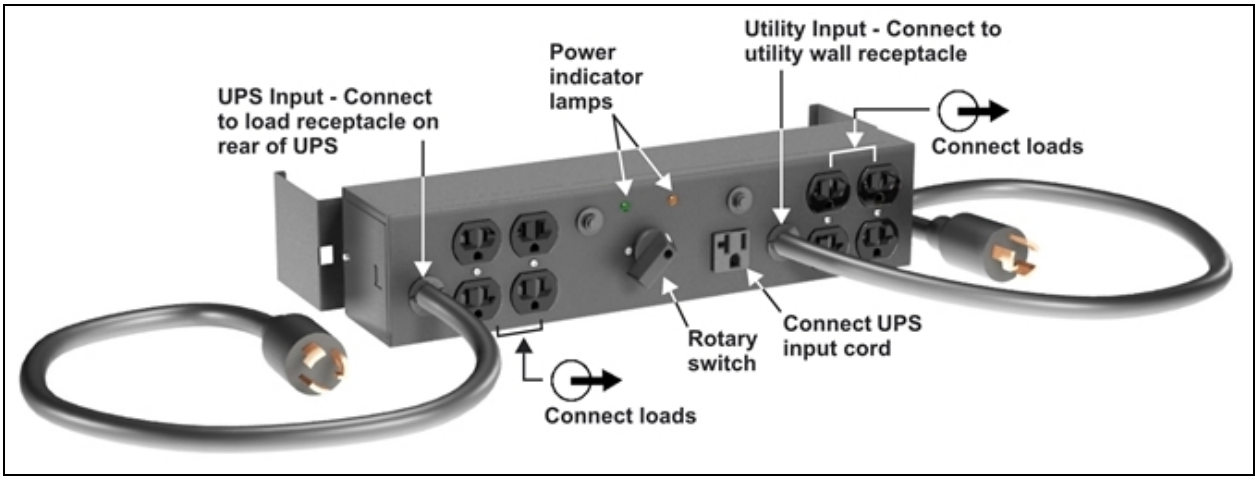

4 INSTALLATION

4.1 Installation on a Liebert GXT UPS

NOTE: This manual provides instructions for the Liebert MicroPOD only. Refer to your UPS manual for UPS operation and installation instructions.

1. Unpack the Liebert MicroPOD carefully, noting the packing method. Retain the box and packing material for possible future shipments.
2. Inspect the Liebert MicroPOD for freight damage. Report any damage to the carrier and your local dealer or Liebert representative.
3. Verify that the Liebert MicroPOD input cord, UPS input cord and receptacle for the UPS have the same type of configuration.
4. If you already have a UPS installed, turn off all connected loads and unplug them from the UPS. Turn off the UPS and disconnect the input cord.
5. Attach the two Liebert MicroPOD securing brackets (optional for Liebert GXT series UPS) to the rear of the UPS (see top of Figure 2.4 on the next page). You will need a long M3 Phillips head screwdriver for this procedure (the torque is 7 in-lb, or 0.79 Nm). The Liebert MicroPOD brackets have a hole to allow the screwdriver to reach the screw.
6. Next attach the Liebert MicroPOD to the securing brackets (see Figure 2.4 on the next page). The Liebert MicroPOD can be installed to face one of three different directions utilizing the same mounting procedures.

Figure 2.4 Attaching Liebert MicroPOD to the UPS with securing brackets

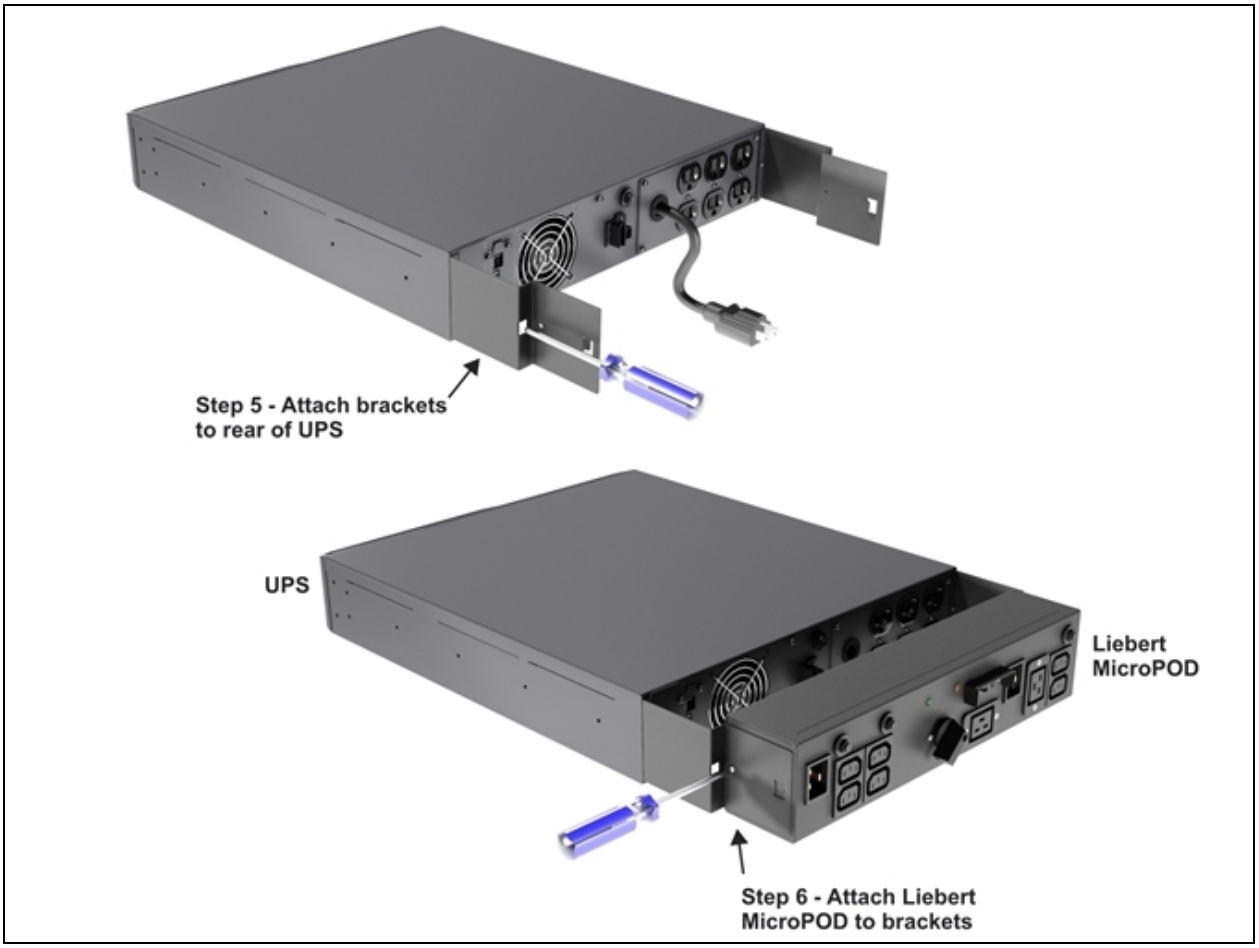

4.2 Rack Mount Installation

1. Rack mount installation of the Liebert MicroPOD is possible with the use of the rack mounting brackets (shipped with the Liebert MicroPOD). See Figure 2.5 on the facing page.
2. The rack mount brackets allow you to rack mount the Liebert MicroPOD in a 19" enclosure.
3. The Liebert MicroPOD can be mounted to face one of four directions depending on your application, utilizing the rack mount brackets provided.
4. Determine the desired position and direction for the Liebert MicroPOD, face it in that direction, then attach the brackets to the Liebert MicroPOD with the screws provided.
5. Consult your rack/enclosure manufacturer's recommendations for specific rack mounting hardware that will be required.
6. The holes on the rack mount bracket are notched for easy installation. Tighten the Liebert MicroPOD securely to the rails and then follow the startup directions for the Liebert MicroPOD in Installation on a Liebert GXT UPS on page 9.

Figure 2.5 Liebert MicroPOD mounting bracket location

CAUTION: Before installing, open all branch rated circuit breakers at the nearest disconnect, turn UPS off and disconnect all cords to and from the UPS.

5 STARTUP PROCEDURE

CAUTION: This UPS must be installed by properly trained and qualified personnel and wired in accordance with local, national and regional electrical codes.

CAUTION: The utility input supply to the Liebert MicroPOD must be protected by a branch rated circuit breaker. The UPS output must also be protected with a circuit breaker connected to the load, rated to carry the input current and be capable of breaking the maximum expected short circuit current of this branch circuit. The breaker is to be mounted within 6 feet (1.8m) of the Liebert MicroPOD and be readily accessible to the operator. Refer to on the facing page for breaker specifications.

5.1 Electrical Connections

Refer to local, regional and national electrical codes to determine the cable sizes and distribution methods used during installation. on the facing page details the standard current ratings.

5.2 Pluggable Connections

1. Make sure the Liebert Micro POD rotary switch is in the UTILITY position. Plug the Liebert MicroPOD input cord (labeled UTILITY) into the utility outlet (wall receptacle).

WARNING! The Liebert MicroPOD is now electrically live. The Utility lamp (amber) should be illuminated.

2. Plug the UPS input cord into the receptacle on top of the Liebert MicroPOD (labeled: CONNECT UPS LINE CORD HERE).

WARNING! The UPS system is now electrically live.

3. Connect the Liebert MicroPOD UPS output cord (labeled: UPS) to the output of the UPS system.
4. Plug in all loads to the output distribution receptacles, distributing them evenly on the Liebert MicroPOD. The Liebert MicroPOD is powering the equipment in Utility mode.
5. Turn ON the loads following the manufacturer's instructions; ensure all are operating according to specification.
6. Start the UPS according to its user manual.
7. Verify that the UPS lamp (green) on the Liebert MicroPOD is illuminated. If so, transfer the rotary switch from UTILITY to UPS. The load is now being supplied with conditioned power through the UPS.
8. Before any operation or procedure, always verify that both the UPS lamp (green) and the Utility lamp (amber) are illuminated before changing the rotary switch.

5.3 Hardwire Connections

Wiring access doors on each end of the POD allow access to the wiring compartments by opening the top and rear of the POD. Each access door is retained with two Phillips head screws. The center screw and center panel should not be removed.

The wiring compartments provide terminal blocks to connect Line, Neutral and Ground for both the UTILITY input and LOAD output.

The cable sizes and distribution methods used during installation are subject to local/national electrical codes of practice and are not detailed here. below details the standard current ratings.

High quality ground (earth) connections are required for the equipment ground conductors (protective earth) (power system earth connection) to provide for safe operation of the UPS and connected loads and to reduce electrical noise. Conduit used alone without a grounding conductor wire is not an acceptable connection. Size ground (protective earth) conductors equal in size to circuit conductors.

Wiring Instructions

1. Remove the wiring access doors by removing the two Phillips head screws that secure them.
2. Determine which of the two available conduit entry points are to be used. Knock out the conduit entry hole for the location and size of conduit to be used.
3. Connect conduit bushing and conduit and run utility load wiring.
4. Inspect wiring to ensure it is not pinched.
5. Make connections to the terminal blocks as labeled. The wiring terminals are labeled.
6. Reattach the wiring access doors and install the retaining screws.

CAUTION: To reduce the risk of fire, connect only to a circuit provided with properly rated maximum branch circuit overcurrent protection in accordance with the National Electric Code.

For wiring information, refer to the following table.

Table 2.1 Breaker specifications

MODEL VA-VOLT RATING	INPUT CURRENT RATING AT 120V	RECOMMENDED (MAXIMUM) EXTERNAL OVERCURRENT PROTECTION	RECOMMENDED WIRE SIZE, AWG (MM2) (INCLUDING GROUND WIRE) (75° COPPER WIRE)	MAXIMUM WIRE ACCEPTED BY TERMINAL BLOCK AWG (MM2)	TERMINAL TIGHTENING TORQUE IN-LB (NM)
MP2-115HW	12A	15A	14 (2.08)	8 (8.36)	12 (1.3)
MP2-120HW	16A	20A	12 (3.31)	8 (8.36)	12 (1.3)
MP2-130HW	24A	30A	10 (5.26)	8 (8.36)	12 (1.3)
MP2-220N	15A*	20A	12 (3.31)	8 (8.36)	12 (1.3)
*The rated input current rating is at 208V.					

To make the hardwire connections:

1. Remove the wiring access doors by removing the two Phillips head screws that secure them.
2. Determine which of the two available conduit entry points are to be used. Knock out the conduit entry hole for the location and size of conduit to be used.
3. Connect conduit bushing and conduit and run utility load wiring.
4. Inspect wiring to ensure it is not pinched.
5. Make connections to the terminal blocks as labeled.
6. Reattach the wiring access doors and reinstall the retaining screws.

Figure 2.6 Removing plates to make hardwire connections

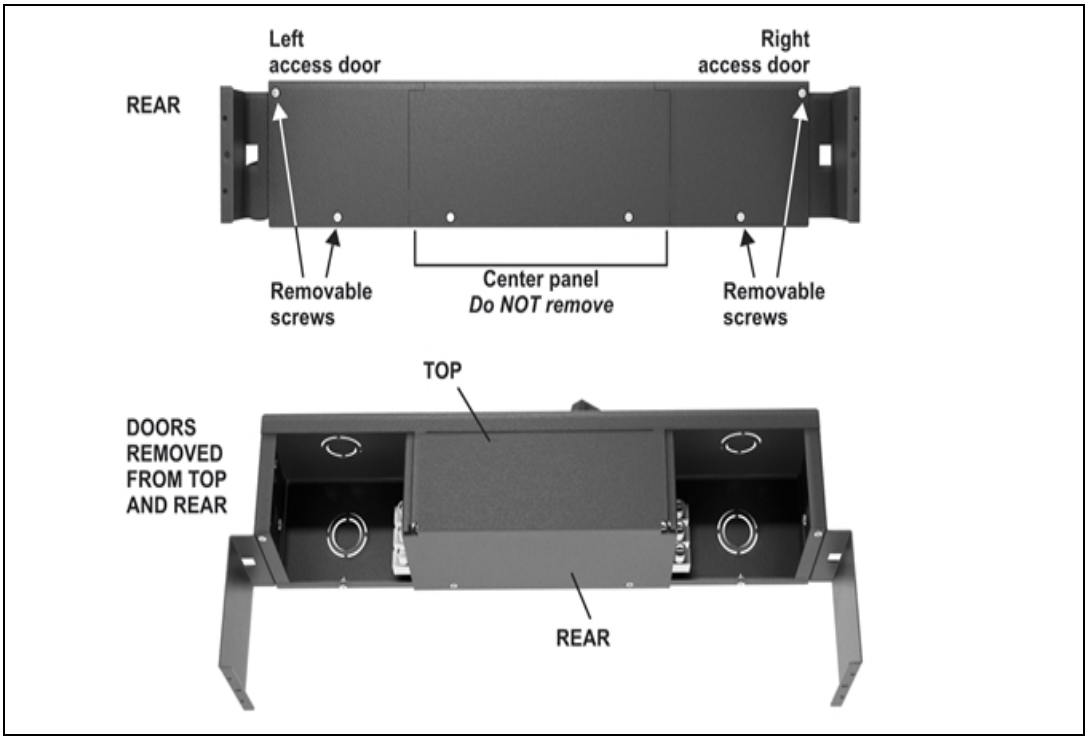

7. Connect all loads to the output distribution receptacles, distributing them evenly on the Liebert MicroPOD.
8. Turn ON the loads following the manufacturer's instructions.
9. Start the UPS according to its user manual.
10. Verify that the UPS lamp (green) on the Liebert MicroPOD is illuminated. If so, transfer the rotary switch from UTILITY to UPS. The load is now being supplied with conditioned power through the UPS.

NOTE: Before any operation or procedure, always verify that both the UPS lamp (green) and the Utility lamp (amber) are illuminated before changing the rotary switch.

6 INDICATOR LAMPS

6.1 Utility Indicator Lamp

This amber lamp is illuminated when utility power is present (see Figure 2.7 below). It signals that loads can be transferred to maintenance bypass (Utility mode) operation via the rotary switch. If utility power is not present, this lamp will be off and the UPS will supply battery backup power to connected loads.

6.2 UPS Indicator Lamp

This green lamp is illuminated when output power is available from the UPS (see Figure 2.7 below). It signals that it is safe to transfer connected loads from utility power back to UPS output power.

Figure 2.7 Indicator lamps on Liebert MicroPOD

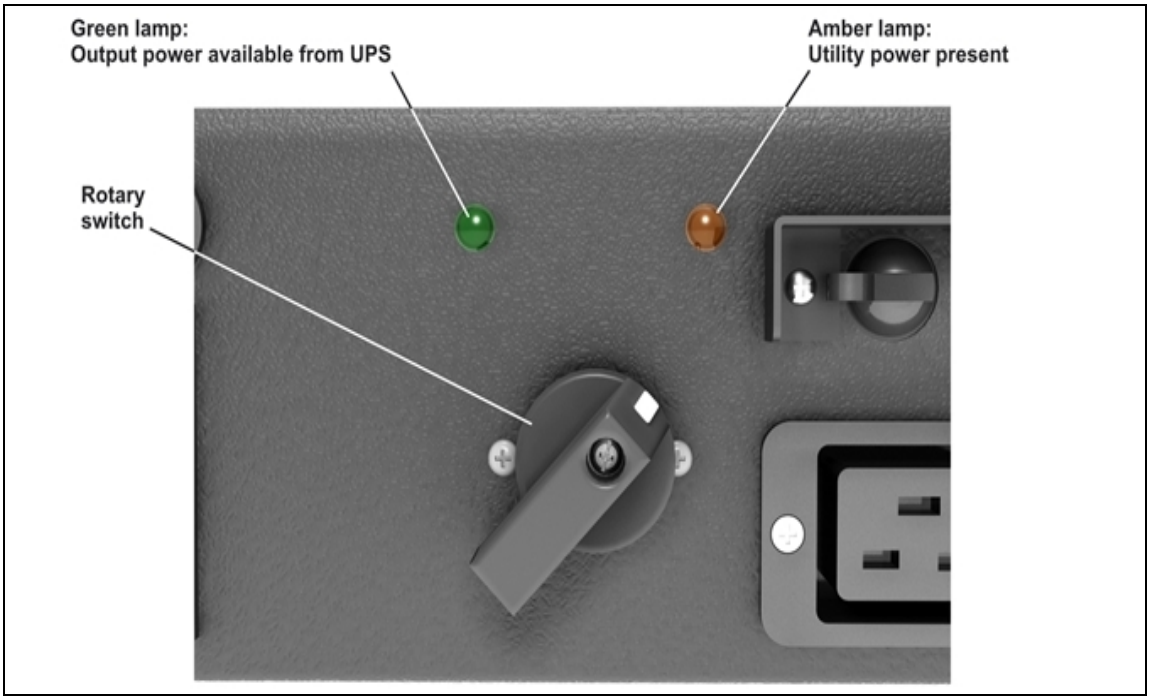

7 OPERATION

7.1 Transfer to Maintenance Bypass

To transfer to maintenance bypass (utility) from UPS, use the following steps:

1. Ensure the Utility lamp (amber) is illuminated. If the lamp is not illuminated, refer to Troubleshooting on page 21.
2. Transfer the rotary switch from UPS to UTILITY, provided the Utility lamp is illuminated on the Liebert MicroPOD.
3. Turn the UPS off.
4. Disconnect the two cables connecting the UPS to the Liebert MicroPOD.
5. You may now service the UPS.

7.2 Transfer to UPS

To transfer to UPS from maintenance bypass (utility), use the following steps:

1. Reconnect the UPS to the Liebert MicroPOD. Start the UPS according to the instructions in the UPS user manual.
2. Verify that UPS lamp (green) on the Liebert MicroPOD is illuminated. If so, transfer the rotary bypass switch from UTILITY to UPS. If the lamp does not illuminate, refer to Troubleshooting on page 21.
3. Conditioned power is now being supplied through the UPS.

8 SPECIFICATIONS

Table 2.2 Specifications—Pluggable Liebert MicroPOD units

MODEL #	MP2-115A	MP2-120C	MP2-130C	MP2-130E	MP2-130P
USED W/ LIEBERT GXT RATING, VA	500 - 1500	2000	3000 120V	3000 120V	3000 120V
Unit	15.51 x 3.03 x 3.46 (394 x 77 x 88)				
Shipping	18.5 x 8.27 x 6.49 (470 x 210 x 165)				
Unit	6.6 (3.0)	6.6 (3.0)	8.8 (4.0)	8.8 (4.0)	8.8 (4.0)
Shipping	8.6 (3.9)	9.5 (4.3)	11.7 (5.3)	11.9 (5.4)	11.7 (5.3)
Electrical Specifications					
AC Input Plug	5-15P on attached 10-ft. (3m) cord	5-20P on attached 10-ft. (3m) cord	L5-30P on attached 10-ft. (3m) cord		
Connection to UPS Input	5-15R	5-15/20R T-type	L5-30R	L5-30R	L5-30R
Connection to UPS Output	5-15P on attached 6-ft (1.8m) cord	5-20-P on attached 6-ft (1.8m) cord	L5-30P on attached 6-ft (1.8m) cord		
Output Receptacles/ Protection	(4) 5-15R w/15A CB (4) 5-15R w/15A CB	(4) 5-15/20R (T-type) w/20A CB (4) 5-15/20R (T-type) w/20A CB		(1) L5-30R w/30A CB (4) 5-15/20R (T-type) w/ 20A CB (2) 5-15/20R (T-type) w/20A CB	(2) 5-15/20R (T-type), (1) L5-20R w/20A CB (2) 5-15/20R (T-type) (1) L5-20R w/20A CB

Table 2.3 Specifications - Optional hardwire Liebert MicroPOD models

MODEL # USED W/ LIEBERT GXT RATING, VA	MP2-220N 3000 208V
Dimensions, W x D x H, in (mm)	
Unit	15.51 x 5.2 x 5.2 (394 x 132 x 132)
Shipping	19.29 x 8.66 x 10.63 (490 x 220 x 270)
Weight, lb (kg)	
Unit	11 (5.0)
Shipping	13.4 (6.1)
Electrical Specifications	
AC Input	L6-20P on attached 10-foot (3m) cord and Optional Hardwire Terminal Block
Connection to UPS Input	L6-20R
Connection to UPS Output	L6-20P on attached 6-foot (1.8m) cord
Output Connection / Protection	(2) L6-20R, (2) L6-15R w/15A CB and Optional Hardwire Terminal Block

Table 2.4 Specifications—Hardwire Liebert MicroPOD units

MODEL #	POWER DISTRIBUTION BOX MODEL #		
	MP2-115HW	MP2-120HW	MP2-130HW
USED WITH LIEBERT GXT RATING (VA)	500 - 1500	2000	3000
Dimensions, W x D x H, in (mm)			
Unit	15.51 x 3.03 x 3.46 (394 x 77 x 88)		
Shipping	18.50 x 8.27 x 6.49 (470 x 210 x 165)		
Weight, lb (kg)			
Unit	4.4 (2.0)	4.4 (2.0)	6.6 (3.0)
Shipping	7.1 (3.2)	7.5 (3.4)	8.4 (3.8)
Electrical Specifications			
AC Input	Hardwire Terminal Block		
Connection to UPS Input	5-15P on attached 6-ft. (1.8m) cord	5-20-P on attached 6-ft. (1.8m) cord	L5-30P on attached 6-ft. (1.8m) cord
Connection to UPS Output	5-15P on attached 6-ft. (1.8m) cord	5-20-P on attached 6-ft. (1.8m) cord	L5-30P on attached 6-ft. (1.8m) cord
Output Connection	Hardwire Terminal Block		

Table 2.5 General characteristics - Liebert MicroPOD units, pluggable and hardwire

Transfer Time (to and from maintenance bypass)	< 6 milliseconds
Operating Ambient Temperature	32°F to 104°F (0°C to +40°C)
Storage Ambient Temperature	-4°F to 140°F (-20°C to +60°C)
Humidity	0 to 95% non-condensing
Agency/Standards	UL 1778, c-UL, ISTA Procedure 1A

This Liebert MicroPOD is intended for use with a UPS meeting all the following requirements:

- UPS input cord is compatible with the rating and type of receptacle on the Liebert MicroPOD labeled UPS.
- UPS output receptacle is compatible with the Liebert MicroPOD input power connector labeled UPS.
- Available utility receptacle is compatible with the Liebert MicroPOD input power connector labeled UTILITY."

9 TROUBLESHOOTING

PROBLEM	CAUSE	SOLUTION
Utility lamp (amber) not illuminated.	Utility not present.	Call qualified service personnel to restore power to receptacle.
	Liebert MicroPOD input cord not connected to utility.	Refer to Liebert MicroPOD installation instructions in this manual: • Installation on a Liebert GXT UPS on page 9 and • Rack Mount Installation on page 10.
UPS Available lamp (green) not illuminated.	UPS output power not present.	Turn on UPS. Refer to UPS user manual.
	UPS input and/or output cord not connected to Liebert MicroPOD.	Refer to Liebert MicroPOD installation instructions in this manual: • Installation on a Liebert GXT UPS on page 9 and • Rack Mount Installation on page 10.
Liebert MicroPOD will not start some / all connected loads.	Liebert MicroPOD output circuit breaker has tripped.	Reset Liebert MicroPOD circuit protectors.
Liebert MicroPOD circuit protectors trip after resetting.	Overcurrent on Liebert MicroPOD receptacle.	Recalculate load requirements, distribute load among other Liebert MicroPOD receptacles.

APPENDICES

Appendix A: Technical Support

Our Technical Support staff is ready to assist you with any installation or operating issues you may encounter with your Liebert product. Please call or e-mail us:

Technical support:

p: 1-800-222-5877 menu option 1

Monitoring support:

p: 1-800-222-5877 menu option 2

Warranty support:

p: 1-800-222-5877 menu option 3

This page intentionally left blank.

are trade names, trademarks or registered trademarks of their respective owners. While every precaution has been taken to ensure accuracy and completeness herein, Vertiv Co. assumes no responsibility, and disclaims all liability, for damages resulting from use of this information or for any errors or omissions. Specifications are subject to change without notice.

SL-23153_REV1_2-18/590-1607-501A