CODELINE® - 80E SERIES
8 INCH END ENTRY MEMBRANE HOUSING FOR RO APPLICATION

MEMBRANE HOUSING DATASHEET

ARTICLE CODE: 80E30, 80E45, 80E60, 80E100, 80E120

GENERAL INFORMATION

Codeline 80E Series is membrane housing of 8" diameter with end entry design. This is used for commercial, municipal and industrial RO applications. Vessel models are available upto a maximum operating pressure of 300 PSI, 450 PSI & 600 PSI, 1000 PSI & 1200 PSI. These are made up of epoxy / glass composite to meet the demands of long term and continuous use in RO processes. Codeline 80E Series vessels can accommodate any standard* 8" membrane element.

* Standard element length = 40 " long

UNIQUE FEATURES

- Mirror Finish ID for easy & quick loading and unloading of membranes
- Quick lock head retention system for quick access to membranes
- Exteriors coated with high gloss polyurethane paint for UV resistance
- Head seal is captured, hence doesn't roll during head assembly fitment
- Compatible for using in all water type application
- Available in ASME certified & CE Marked models

CERTIFICATIONS

- ASME code compliant
- CE certified

CODELINE 80E SERIES SPECIFICATION*

MODEL NUMBER	DRAWING NUMBER	MAX. OPERATING PRESSURE	MAX. OPERATING TEMPERATURE	QUALIFICATION PRESSURE	ELEMENT LENGTH
CODELINE 80E30	99111	300 PSI / 20 Bar	120 °F / 49 °C	1800 PSI / 124 Bar	1-8
CODELINE 80E45	99112	450 PSI / 31 Bar	120 °F / 49 °C	2700 PSI / 186 Bar	1-8
CODELINE 80E60	99109	600 PSI / 41 Bar	120 °F / 49 °C	3600 PSI / 248 Bar	1-8
CODELINE 80E100	99108	1000 PSI / 68 Bar	120 °F / 49 °C	6000 PSI / 413 Bar	1-8
CODELINE 80E120	99110	1200 PSI / 82 Bar	120 °F / 49 °C	7200 PSI / 496 Bar	1-8

* Specifications are subjected to change without prior notice (for more details refer model specific engineering drawings)

CODELINE® - 80E SERIES
8 INCH END ENTRY MEMBRANE HOUSING FOR RO APPLICATION

MEMBRANE HOUSING DATASHEET

EXPLODED VIEW & DETAILS

A GENERIC VIEW FOR VISUAL REFERENCE ONLY

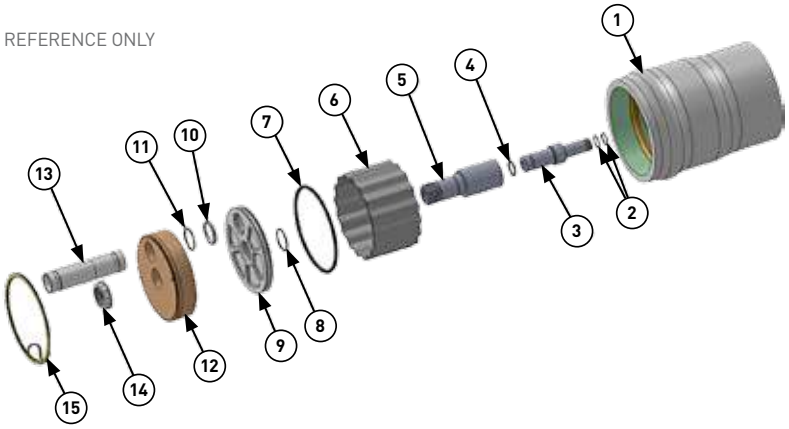

PARTS TABLE

DRG REG	QTY	DESCRIPTION	MATERIAL	80E30	80E45	80E60	80E100	80E120
				PART NUMBER	PART NUMBER	PART NUMBER	PART NUMBER	PART NUMBER
1	1	Shell	Filament Wound Epoxy / Glass composites. Head Locking grooves integrally wound in place.	Order section	Order section	Order section	Order section	Order section
2	4	PWT Seal	Ethylene Propylene - O Ring	As required	As required	As required	As required	As required
3	2	Adapter	Engineering Thermoplastic	As required	As required	As required	As required	As required
4	2	Adapter Seal	Ethylene Propylene – O Ring	52245	52245	52245	52245	52245
5	2	Permeate Port	Engineering Thermoplastic	50608	50569	50569	50558	50558
6	1	Thrust Ring	Engineering Thermoplastic	45069	45069	45069	45069	45069
7	2	Head Seal	Ethylene Propylene - O Ring	96000	96000	96000	96000	96000
8	2	Perm Port Seal	Ethylene Propylene - O Ring	45312	45312	45312	45312	45312
9	2	Sealing Plate	Engineering Thermoplastic	96003	96003	96003	96003	96003
10	2	Port Retainer / Set	Stainless Steel / Two-piece Set	45247	45090	45090	45090	45090
11	2	FC Port Seal	Ethylene Propylene - O Ring	45312	45312	45312	45312	45312
12	2	Bearing Plate	6061-T6 Aluminum Alloy - Hard Anodized	51050	51051	51052	47317	47317
13	2	Feed / Conc Port	Stainless Steel 316L** / Super Duplex Stainless Steel	50607**	50567**	50567**	50556	50556
14	2	Port Retainer / Port Nut	Stainless Steel / Engineering Thermoplastic	45247	45066	45066	45066	45066
15	2	Retaining Ring	316 Stainless Steel	47336	47336	47336	47336	47336
16*	AR	Saddle	Engineering Thermoplastic	52169	52169	52169	52169	52169
17*	AR	Strap Assembly	304 Stainless Steel - PVC Cushion	45042	45042	45042	45042	45042
18*	AR	Strap Screw	5/16-18 UNC, 18-8 Stainless Steel	46265	46265	46265	46265	46265

* Not shown in the exploded view
** Stainless Steel 316L material

PENTAIR