LinMot® F01-37S and F01-48 Guides

Version 1.76e

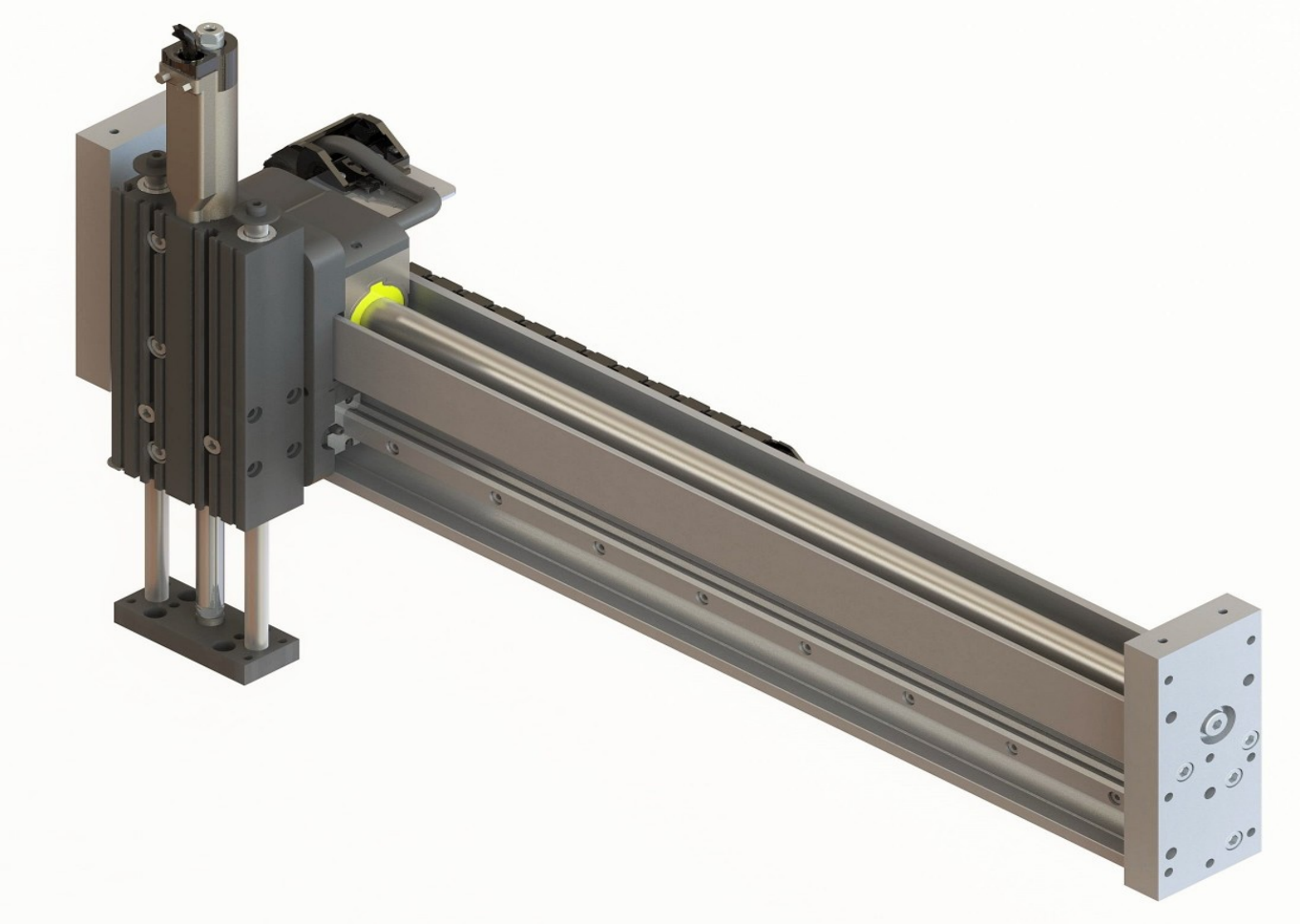

CAUTION

LINMOT SLIDERS CONTAIN NEODYMIUM MAGNETS WHICH MAY DISTURB OR DAMAGE MAGNETIC DATA CARRIERS AND DELICATE ELECTRONIC EQUIPMENT MERELY BY COMING CLOSE TO THEM.





WHEN HANDLING SLIDERS BE AWARE THAT, DUE THE STRONG MAGNETIC ATTRACTION, INJURY FROM FINGERS BEING PINCHED BETWEEN THE SLIDER AND NEARBY STEEL PARTS IS A VERY REAL POSSIBILITY IF CAUTION IS NOT EXERCISED.



THE SLIDERS OF LINMOT® MOTORS CAN REACH TEMPERATURES WHICH MAY CAUSE BURNS UPON BEING TOUCHED.



THE SLIDERS AND SHAFTS OF LINMOT® LINEAR-ROTARY MOTORS ARE FAST-MOVING MACHINE PARTS. THE USER MUST TAKE ALL NECESSARY PRECAUTIONS TO PREVENT THEIR BEING TOUCHED (PROVIDE COVERS, PROTECTION AGAINST TOUCHING ETC.).



The complete documentation including technical data, drawings and accessories can be downloaded from the download area on the web page www.LinMot-USA.com .

CAD files and STEP files can be downloaded from the CAD download area on the web page www.LinMot-USA.com .

1 Inhaltsverzeichnis

EXAMPLE LAYOUT **6**
DESCRIPTION **7**
TECHNICAL DATA FOR F01-37 GUIDE **9**
Dimensions and mass of F01-37S guides 10
Mass and Friction F01-37 for LinMot Designer adn LinMot Talk 10
TECHNICAL DATA FOR F01-48 GUIDE **11**
Dimensions and mass of F01-48 guides 12
Mass and Friction F01-48 for LinMot Designer and LinMot Talk 12
DRIVE SETUP **13**
WIZARD LINMOT-TALK SOFTWARE **13**
Select the right stator and slider length 13
Define Payload 14
PID Controller 14
Homing 15
Full length of stroke 16
ORDER INFORMATION FOR GUIDE F01-37S **17**
1. Step: Select F01-37S guide 17
2. Step: Select Slider 17
3. Step: Select type and quantity of Carriage-Kit 18
4. Step: Select type and quantity of Stator 18
5. Step: Select Trailing chain kit or trailing chain (optional) 19
6. Step: Select Trailing chain cables (high-flex cable) 20
7. Step: External Sensor-Kit (optional) 21
8. Step: Magnetic strip (optional) 21
9. Step: Adapter plate for linear rotary motors (optional) 22
10. Step: Nuts for T-Slot (optional) 22
Order example: 23
ORDER INFORMATION FOR GUIDE F01-48 ..... **24**
1. Step: Select F01-48 guide 24
2. Step: Select type and quantity of Stators and Flanges 24
3. Step: Select quantity of Carriage-Kit 25
4. Step: Select Slider 25
5. Step: Select Trailing chain kit or trailing chain (optional) 26
6. Step: Select Trailing chain cables (high-flex cable) 27
7. Step: External Sensor-Kit (optional) 27
8. Step: Magnetic strip (optional) 27
9. Step: Adapter plate for linear rotary motors (optional) 28
10. Step: Nuts for T-Slot (optional) 28
DIMENSIONS: SEE DRAWINGS **28**
GANTRY DESIGN **29**
Assembly of Gantry design F01-37x Guides 29
Assembly of Gantry design F01-48x Guides 30
COMBINATION OF F01-48 AND F01-37S GUIDES **31**
Semi gantry design 31

Assembly of Semi gantry design....32
MULTIPLE CARRIER DESIGN EXAMPLE....33
MOUNTING INSTRUCTIONS....34
ASSEMBLING INSTRUCTIONS....35
Direction of the motor cable....35
Assembly and disassembly of the motors and carriages....35
Assembly of the slider....37
Assembly of the railway....37
Assembly of Trailing Chain Kit....38
Assembly of an external sensor-kit....39
Assembly of an external holding brake (pneumatic)....40
BEARING LOAD ON F01-37S GUIDES....40
Static and dynamic bearing loads Fx und Fy....40
Calculation of the static load bearing Fx and Fy....41
Static and dynamic moment load Mxyz....42
ELECTRICAL CONNECTION OF TH PS01-37S STATORS....43
Installation of the motor cable....44
MOUNTING „LONG“ LOADS ON THE F-GUIDE....45
FIGURE: ADDITIONAL GUIDE MOUNTED TO THE TOP END OF THE LOAD TO PREVENT VIBRATIONS....45
MOUNTING LINMOT PRODUCTS ON F-GUIDES....46
H-Guides, B-Guides and DM-Guides on F01-37x F-Guide....46
H01-23x Guide / B01-23x Guide....46
H01-37x Guide / B01-37x Guide....46
DM01-23x Guide....47
Linear-Rotary Motors PR01- on F01-37x F-Guide....47
PR01-52x40-R/37x120F-HP-C-80 (-L)....47
PR01-52x60-R/37x120F-HP-C-100 (-L)....48
PR01-52x60-R-G/37x120F-HP-C-100-G05 (G10)....48
PR01-52x60-R/37x120F-HP-C-150 (-L)....48
H-Guides and B-Guides on F01-48x F-Guide....50
H01-23x Guide / B01-23x Guide....50
H01-37x Guide / B01-37x Guide....50
H01-48x Guide / B01-48x Guide....51
Linear-Rotary Motors PR01- on F01-48x F-Guide....52
PR01-52x40-R/37x120F-HP-C-80 (-L)....52
PR01-52x60-R/37x120F-HP-C-100 (-L)....52
PR01-52x60-R-G/37x120F-HP-C-100-G05 (G10)....53
PR01-52x60-R/37x120F-HP-C-150 (-L)....53
PR01-84x80-C/48xXXF-C-100 (-L)....54
PR01-84x80-C/48xXXF-C-100 (G0x)....55
MAINTENANCE....56
Maintenance of Carriages....56
Relubrication of carriages....56
Quantity of lubricant for carriages....56
Lubricant for carriages....56
Maintenance of LinMot Motors....57
Storage / transport....58
CAUTION: HANDLING INSTRUCTIONS FOR SLIDERS....59
DRAWINGS F01-37S....60

Stroke Range F01-37S guide....60
Dimensions F01-37S guide....61
Dimensions F01-37S-AP ground plate....62
Dimensions F01-37S end plates....63
Dimensions F01-37S T-slots....64
Dimensions with H01-23x86 guide....65
Dimensions with H01-37x166 guide....66
Dimensions with PR01-52x40-R/37x120F-HP-C-80/-L....67
Dimensions with PR01-52x60-R/37x120F-HP-C-100/-L....68
Dimensions with PR01-52x60-R/37x120F-HP-C-100-G....69
DRAWINGS F01-48....70
Stroke Range F01-48 guide....70
Dimensions F01-48 guide....71
Dimensions F01-48 ground plate....72
Dimensions F01-48 end plate....73
DECLARATION OF CONFORMITY CE-MARKING....74
CONTACT ADDRESS:....75

Example Layout



Figure 1: Gantry-Design with three F01-37S guides



Figure 2: F01-37S guide with two independent motors on the same track

Description

The LinMot F01-37S and F01-48 guides are moving stator applications with tubular linear motors. The mechanical design is based on a special aluminum profile on which a high precision profile rail guide is attached. Use of ball bearings in the carriages guarantee a reliable and smooth operation. The design of both guides is very similar but different in the dimensions.
F-guides can be mounted together into a gantry design (Fig. 1) without any additional adapters. It is also possible to run more than one motor on the same guide (Fig. 2). There are two sizes of motors available for each size of F-guide; the PS01-37Sx60 offers highest velocity on a very short design while the PS01-37Sx120 presents double the peak force with an additional 60mm length. The motors of the PS01-48 series offers a peek force up to 1000 N (250 lbf).
Together with the H01 guides for the vertical axis (Fig. 3) and the linear rotary motors of the PR01-52 series (Fig. 4&5) the F-guides offer a powerful toolbox for any automation task.

Figure 3: F01-37S Guide with mounted H01-23 guide for z-axis

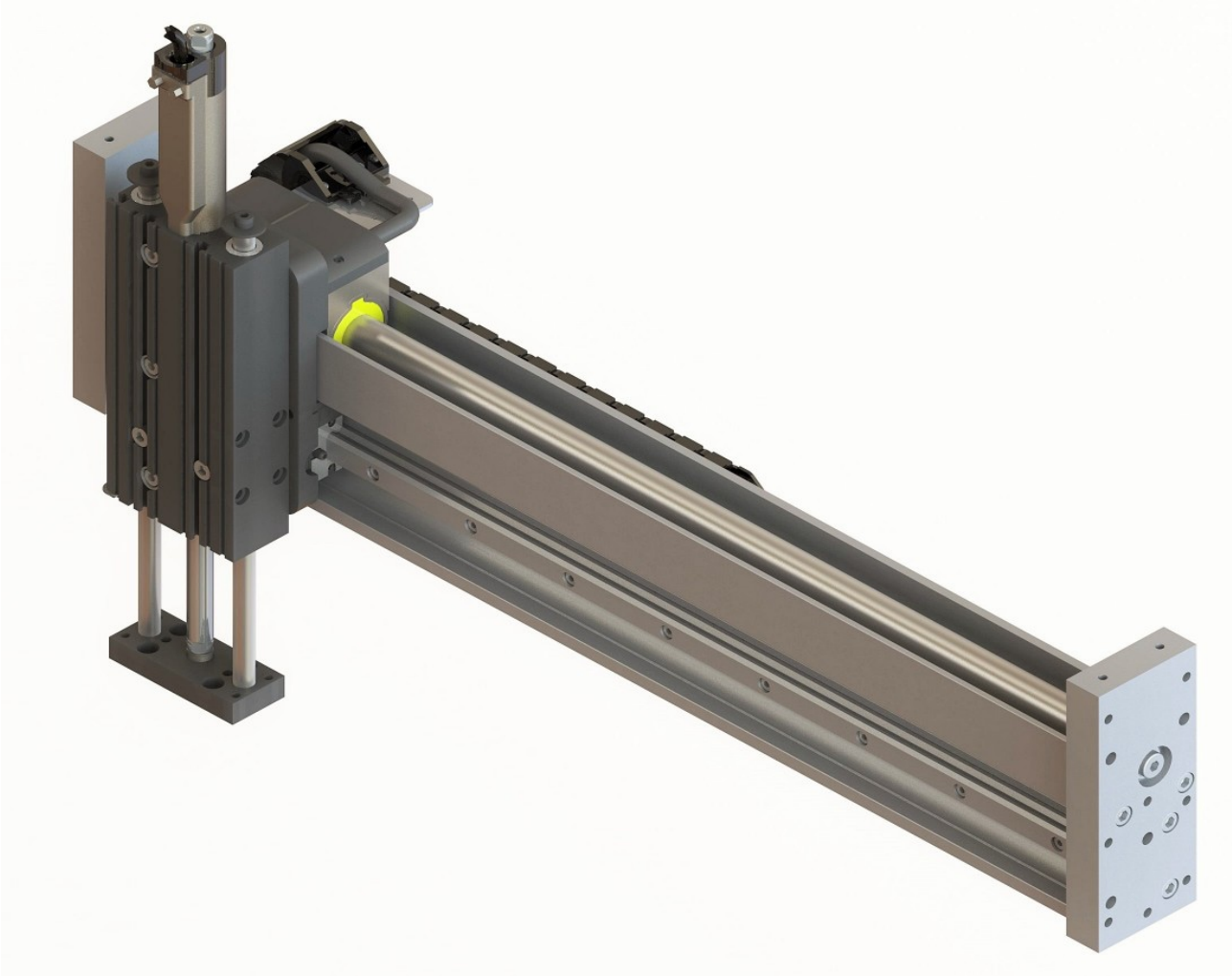

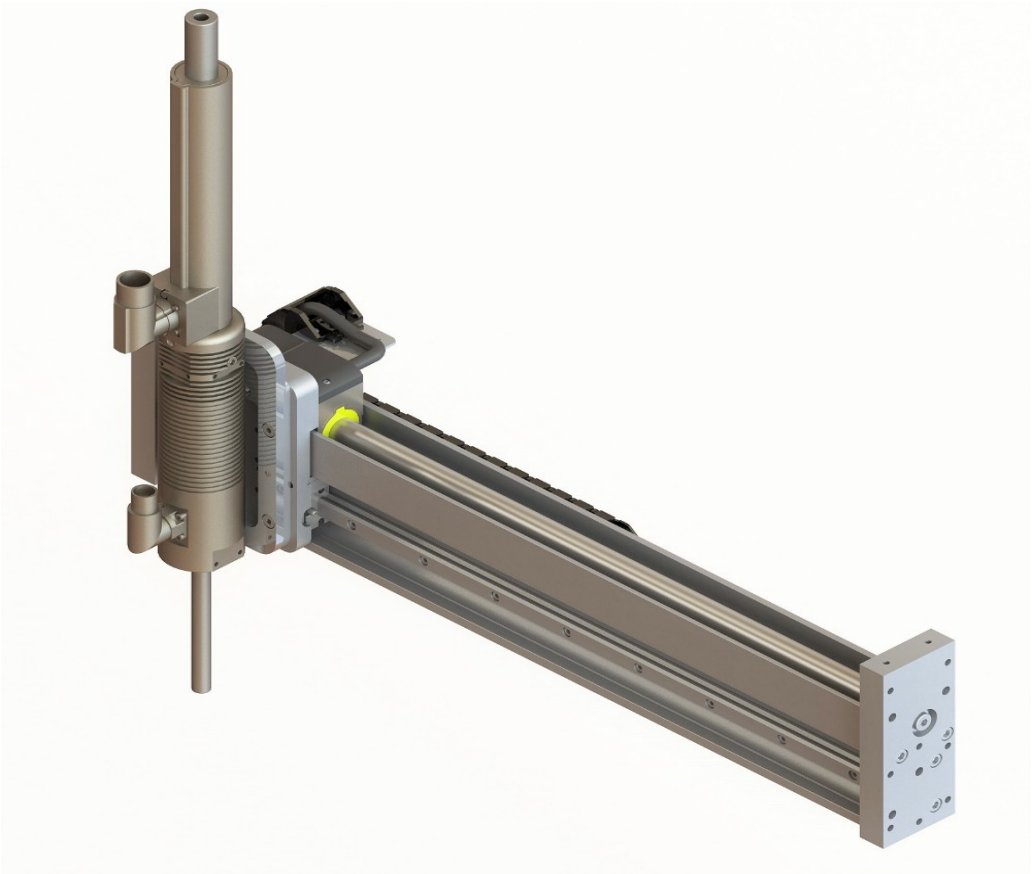

Figure 4: F01-37S Guide with mounted linear rotary motor PR01-52



Figure 5: Gantry Design with mounted linear rotary motor PR01-52

Technical data for F01-37 Guide

		value	Note
Static load rating	C	15'400 N (3462 lbf)	See chapter bearing load
Dynamic load rating	C_0	8'400 N (1888 lbf)	See chapter bearing load
Static moment load	M_{x0}	103 Nm (75.9 lb ft)	See chapter bearing load
	M_{y0}	90 Nm (66.3 lb ft)	See chapter bearing load
	M_{z0}	90 Nm (66.3 lb ft)	See chapter bearing load
Dynamic moment load	M_x	56 Nm (41.3 lb ft)	See chapter bearing load
	M_y	49 Nm (36.1 lb ft)	See chapter bearing load
	M_z	49 Nm (36.1 lb ft)	See chapter bearing load
Max velocity	v_{max}	5 m/s (196 in/s)	Depending on motor
Max acceleration	a_{max}	75 m/s^2 (2952 in/s^2)	Depending on motor
Stator PS01-37Sx60			
Peak Force	F_{peak}	122 N (27.4 lbf)	
Continuous Force	F_{cont}	20 N (4.5 lbf)	
Max phase current @ 72VDC	I_{max}	12 A	
Moving mass total	$m_{lin\ tot}$	1100 g (2.42 lb)	Stator, carriage, adapter plate
Repeatability without external Sensor		+/- 0.05 mm (+/- 0.002 in)	
Repeatability with external Sensor		+/- 0.01 mm (+/- 0.0004 in)	With external sensor
Friction (estimation)	F_r	7 N (1.6 lbf)	Dependent on application
Stator PS01-37Sx120			
Peak Force	F_{peak}	255 N (57.3 lbf)	
Continuous Force	F_{cont}	35 (7.8 lbf)	
Max phase current @ 72VDC	I_{max}	15 A	
Moving mass total	$m_{lin\ tot}$	1470 g (3.24 lb)	Stator, carriage, adapter plate
Repeatability without external Sensor		+/- 0.05 mm (+/- 0.002 in)	
Repeatability with external Sensor		+/- 0.01 mm (+/- 0.0004 in)	With external sensor
Friction (estimation)	F_r	7 N (1.6 lbf)	Dependent on application

To calculate the motor specific application data we recommend to use the sizing tool LinMot Designer. (see

Dimensions and mass of F01-37S guides

Description	Part-No	Length total	Mass
F01-37Sx300	0150-5453	330 mm (13.0 in)	3430 g (7.57 lb)
F01-37Sx400	0150-5449	430 mm (16.9 in)	4310 g (9.5 lb)
F01-37Sx500	0150-5450	530 mm (20.9 in)	5220 g (11.51 lb)
F01-37Sx600	0150-5424	630 mm (24.8 in)	6100 g (13.45 lb)
F01-37Sx800	0150-5425	830 mm (32,7 in)	7860 g (17.33 lb)
F01-37Sx1000	0150-5426	1030 mm (40.6 in)	9640 g (21.25 lb)
F01-37Sx1200	0150-5427	1230 mm (48.4 in)	11400 g (25.13 ib)
F01-37Sx1400	0150-5428	1430 mm (56.3 in)	13200 g (29.10 lb)
F01-37Sx1600	0150-5429	1630 mm (64.2 in)	14930 g (32.92 lb)
F01-37Sx2000	0150-5430	2030 mm (79.9 in)	18490 g (40.76 lb)

Mass including end-plates, profile rail and slider (without stator and adapter plate)

Mass and Friction F01-37 for LinMot Designer adn LinMot Talk

Select Stator: PS01-37Sx60 or PS01-37Sx120 high performance
Select Slider: according to the guide length

Select Motor Layout: “Moving Stator”

Mass: “add Stator mass”
Mass: with carrier kit F01-37S/FWK: 600 g
with carrier kit F01-37S/FWK-F: 790 g (guides >= 1400 mm length)

Dry friction: 7 N

Note: Depending on the application the mass of the high flex cable(s) must be considered.

Technical data for F01-48 Guide

		value	Note
Static load rating	C	30'800 N (6924 lbf)	See chapter bearing load
Dynamic load rating	C_0	16'800 N (3776 lbf)	See chapter bearing load
Static moment load	M_{x0}	206 Nm (151.8 lb ft)	See chapter bearing load
	M_{y0}	180 Nm (132.6 lb ft)	See chapter bearing load
	M_{z0}	180 Nm (132.6 lb ft)	See chapter bearing load
Dynamic moment load	M_x	112 Nm (82.6 lb ft)	See chapter bearing load
	M_y	98 Nm (72.2 lb ft)	See chapter bearing load
	M_z	98 Nm (72.2 lb ft)	See chapter bearing load
Max velocity	v_{max}	3 m/s (118 in/s)	Depending on motor
Max acceleration	a_{max}	50 m/s^2 (1968 in/s^2)	Depending on motor
Stator PS01-48X240F-C			
Peak Force	F_{peak}	550 N (123.6 lbf)	
Continuous Force	F_{cont}	145 N (32.6 lbf)	
Max phase current @ 72VDC	I_{max}	26 A	
Moving mass total	$m_{lin\ tot}$	4900 g (10.8 lb)	Stator, carriage, adapter plate
Repeatability without external Sensor		+/- 0.05 mm (+/- 0.002 in)	
Repeatability with external Sensor		+/- 0.01 mm (+/- 0.0004 in)	With external sensor
Friction (estimation)	F_r	30 N (6.7 lbf)	Dependent on application
Stator PS01-48X360F-C			
Peak Force	F_{peak}	1024 N (230.1 lbf)	
Continuous Force	F_{cont}	203 N (45.7 lbf)	
Max phase current @ 72VDC	I_{max}	32 A	
Moving mass total	$m_{lin\ tot}$	6250 g (13.8 lb)	Stator, carriage, adapter plate
Repeatability without external Sensor		+/- 0.05 mm (+/- 0.002 in)	
Repeatability with external Sensor		+/- 0.01 mm (+/- 0.0004 in)	With external sensor
Friction (estimation)	F_r	34 N (7.6 lbf)	Dependent on application

Stator PS01-48X240F-HP-C			
Peak Force	F_{peak}	572 N (129 lbf)	
Continuous Force	F_{cont}	170 N (38 lbf)	
Max phase current @ 72VDC	I_{max}	25.9 A	
Moving mass total	$m_{lin\ tot}$	4900 g (10.8 lb)	Stator, carriage, adapter plate
Repeatability without external Sensor		+/- 0.05 mm (+/- 0.002 in)	
Repeatability with external Sensor		+/- 0.01 mm (+/- 0.0004 in)	With external sensor
Friction (estimation)	F_r	30 N (6.7 lbf)	Dependent on application

To calculate the motor specific application data we recommend to use the sizing tool LinMot Designer. (see

Dimensions and mass of F01-48 guides

Description	Part-No	Length total	Mass
F01-48x500	0150-5469	540 mm (21.3 in)	6.93 kg (15.27 lb)
F01-48x620	0150-5470	660 mm (26.0 in)	8.19 kg (18.04 lb)
F01-48x800	0150-5471	840 mm (33.1 in)	10.19 kg (22.46 lb)
F01-48x1010	0150-5472	1050 mm (41.3 in)	12.45 kg (27.44 lb)
F01-48x1220	0150-5473	1260 mm (49,6 in)	14.70 kg (32.42 lb)
F01-48x1400	0150-5474	1440 mm (56.7 in)	16.71 kg (36.84 lb)
F01-48x1610	0150-5475	1650 mm (65,0.4 in)	18.97 kg (41.81 lb)
F01-48x1820	0150-5476	1860 mm (73.2 in)	21.23 kg (46.81 lb)
F01-48x2000	0150-5477	2040 mm (80.3 in)	23.18 kg (51.09 lb)
F01-48x2210	0150-5478	2250 mm (88,6 in)	25.44 kg (56.09 lb)
F01-48x2450	0150-5479	2490 mm (98.0 in)	28.03 kg (61.79 lb)

Mass including end-plates, profile rail and slider (without stator and adapter plate)

Mass and Friction F01-48 for LinMot Designer and LinMot Talk

Select Stator: PS01-48x240F…, PS01-48x360F... or PS01-48x240F-HP-C
Select Slider: according to the guide length

Select Motor Layout: “Moving Stator”

Mass: “add Stator mass”
PS01-48Fx240 (HP) Mass: Flange and carrier kit F01-48/FWK-F: 2970 g
PS01-48Fx360 Mass: Flange and carrier kit F01-48/FWK-F: 3370 g

Dry friction: 34 N

Note: Depending on the application the mass of the high flex cable(s) must be considered.

Drive Setup

The best way to setup a F-Guide together with a LinMot drive is to follow the wizard of the LinMot-Talk software. Detailed information about this wizard can be found in the manuals about the drives. Please note the following screen shots of the wizard which may help to answer some questions

Wizard LinMot-Talk Software

Select the right stator and slider length

(Note: F01-37Sx**1600**-F relates to a slider PL01-20x**1600**/1540-HP
stator selection: see label on the stator)

Select 'regular' for Slider mounting direction (comment: in this kind of application the slider direction is not important).

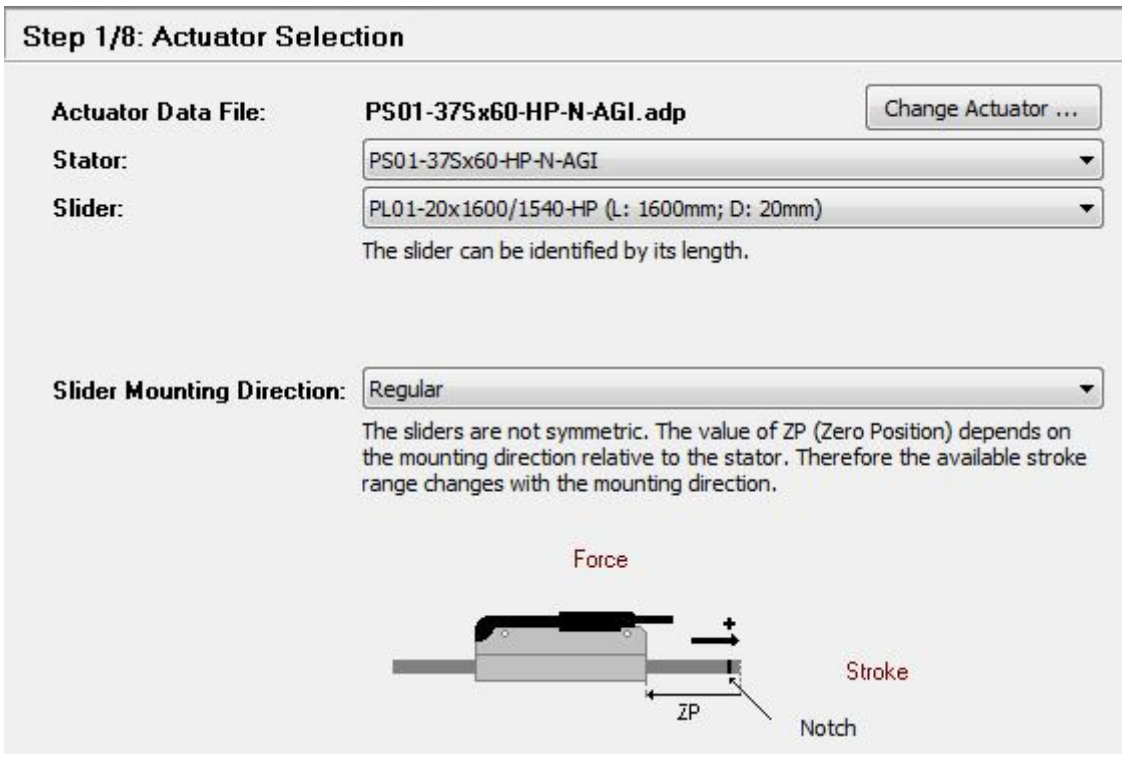

Define Payload

The mass of the carriage-kit is about 465 g. The friction is about 7 N. In gantry design, the friction may be higher. (See Chapter “Mass and Friction F01-37 for LinMot Designer and LinMot Talk” and “Mass and Friction F01-48 for LinMot Designer and LinMot Talk”.)

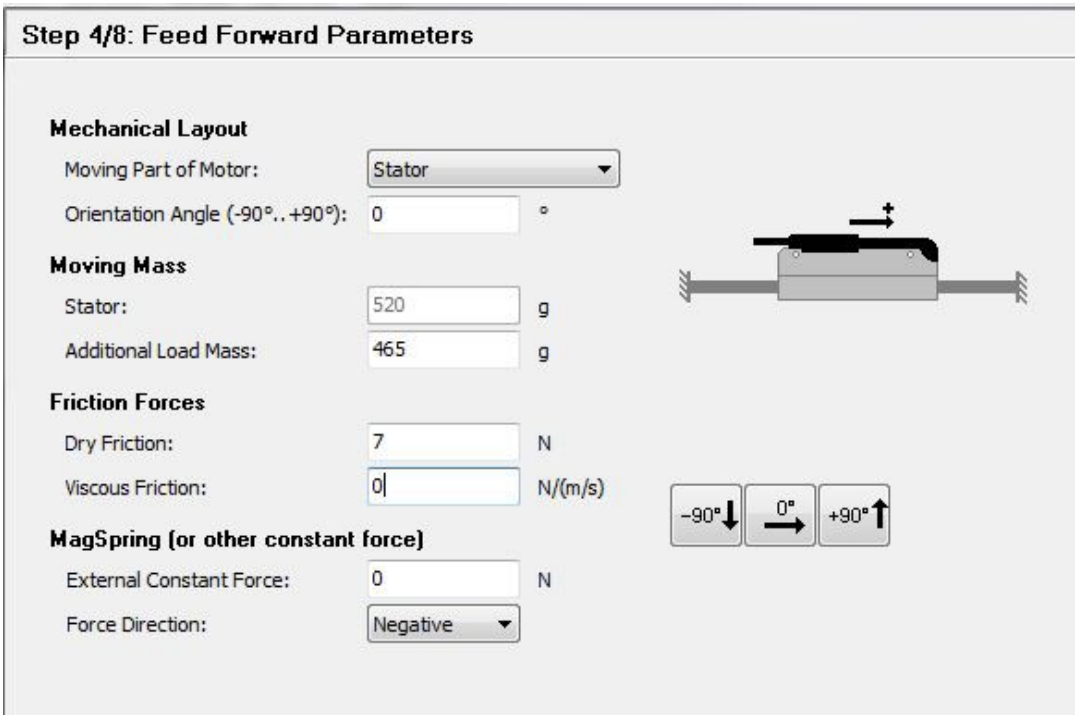

PID Controller

See recommended values to start (the values are higher than normal motor without F-guide)
Increase the values if needed. If the payload is high, then increase the D-Filter time as well. (Default D-Filter time = 400 us).

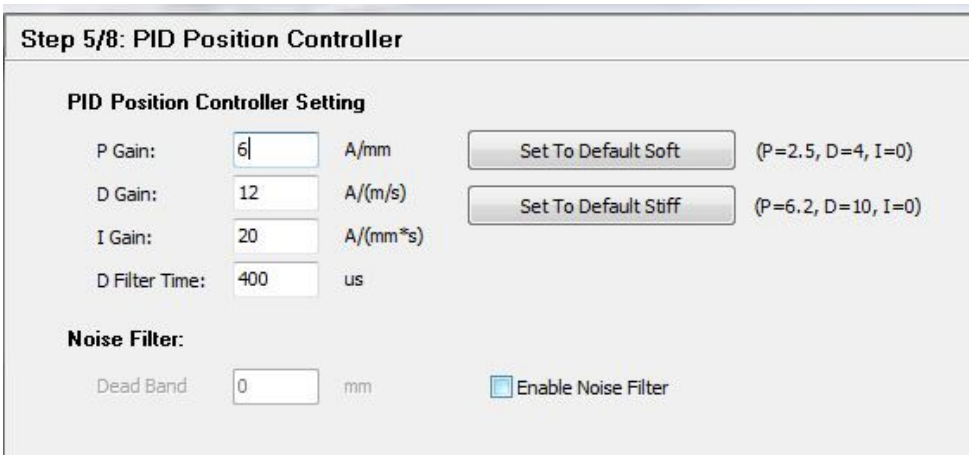

Homing

Measure the distance B, which is the distance between the carriage and the end-plate, if the carriage is at the other end of the guide.

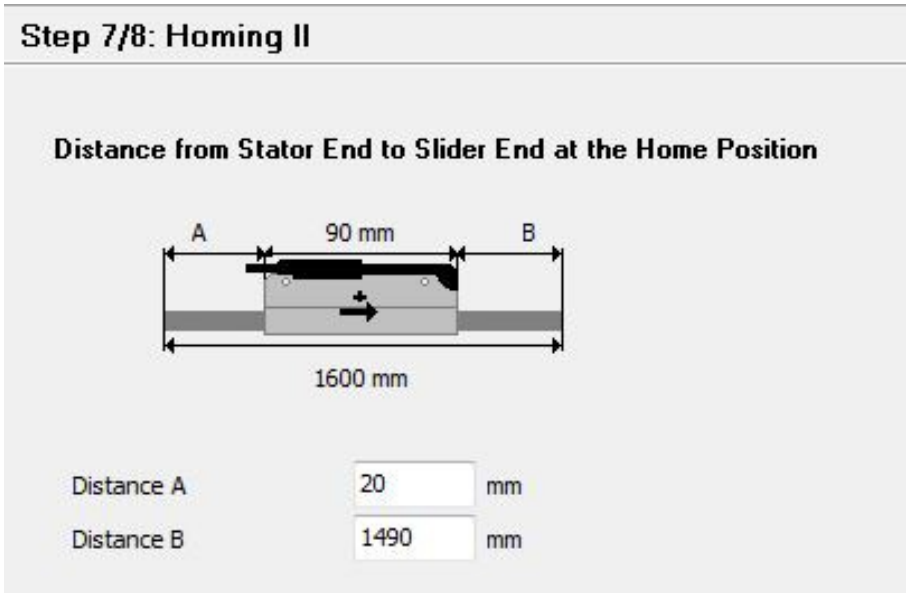

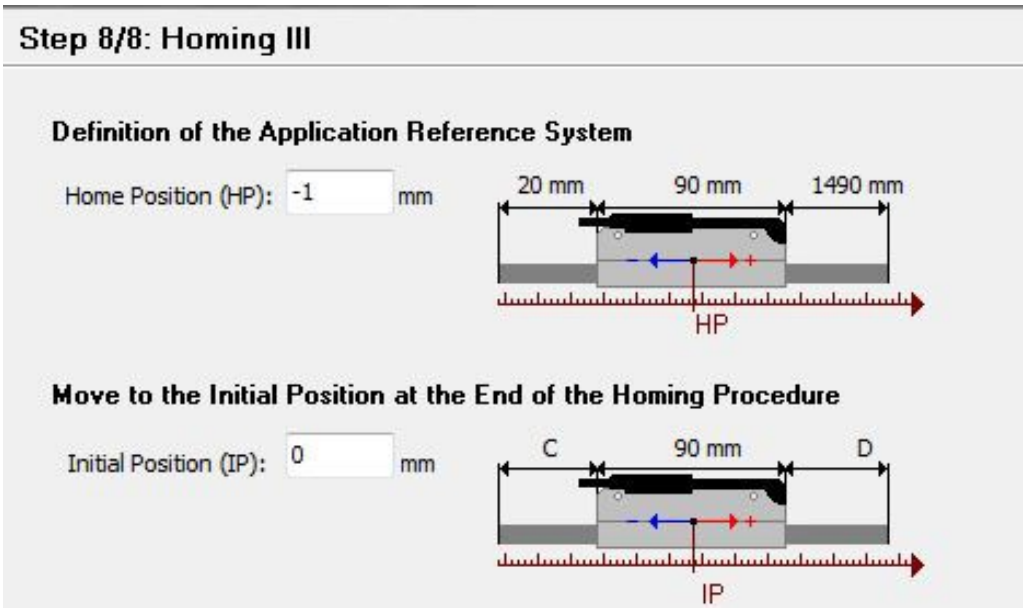

Full length of stroke

To use the full length of the mechanical stroke on a F01-37S guide it is necessary to switch off the 'Maximal Position' error.

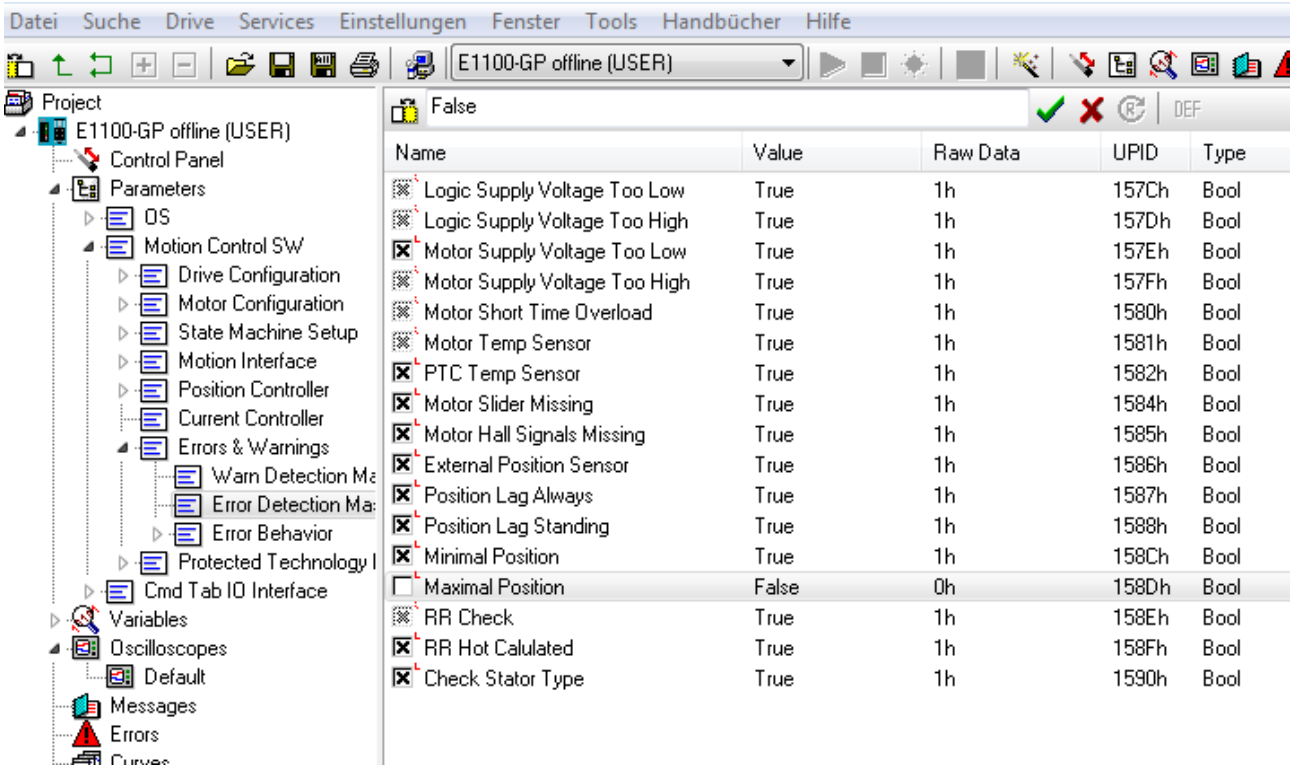

Or change the minimal and maximal position

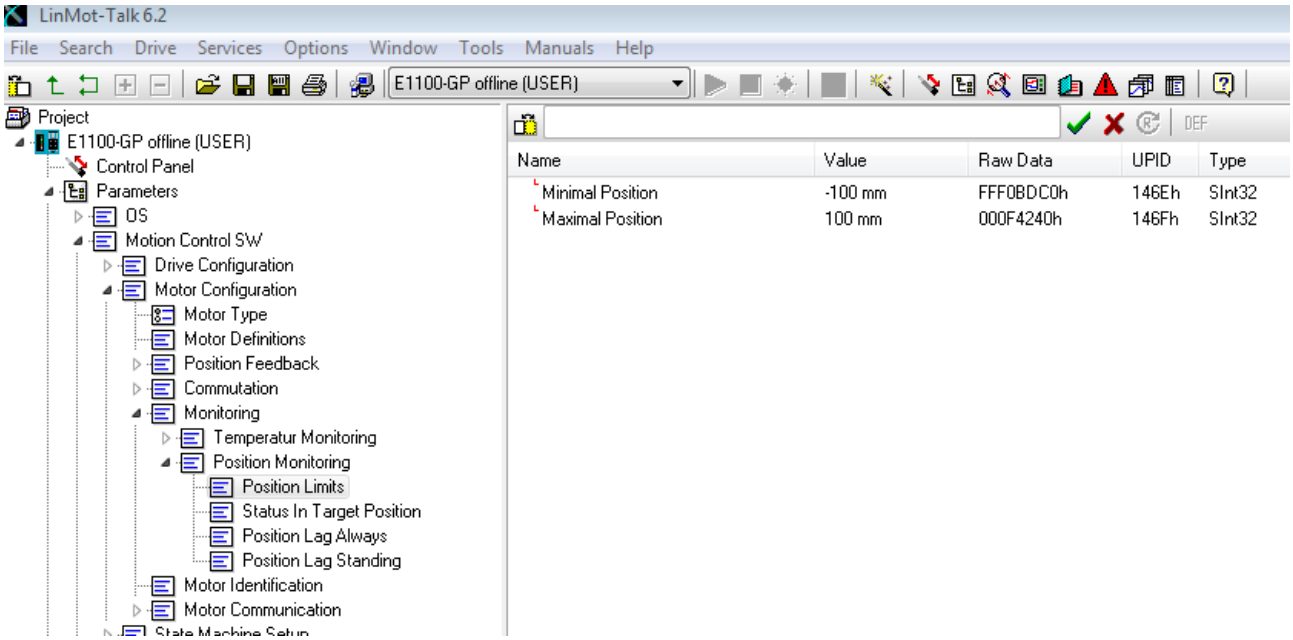

Order Information for Guide F01-37S

The guides will be delivered pre-assembled. See section 'Assembling of components' if additional stators or parts must be installed later. Go step by step though the following order procedure:

1. Step: Select F01-37S guide

Description	Part-No	Length total	Stroke w. PS01-37Sx60*	Stroke w. PS01-37Sx120*
F01-37Sx300	0150-5453	330 mm	200 mm (7.8")	140 mm (5.5")
F01-37Sx400	0150-5449	430 mm	300 mm (11.8")	240 mm (9.4")
F01-37Sx500	0150-5450	530 mm	400 mm (15.7")	340 mm (13.3")
F01-37Sx600	0150-5424	630 mm	500 mm (19.6")	440 mm (17.3")
F01-37Sx800	0150-5425	830 mm	700 mm (27.5")	640 mm (25.1")
F01-37Sx1000	0150-5426	1030 mm	900 mm (35.4")	840 mm (33")
F01-37Sx1200	0150-5427	1230 mm	1100 mm (43.3")	1040 mm (40.9")
F01-37Sx1400-F	0150-5428	1430 mm	1300 mm (51.1")	1240 mm (48.8")
F01-37Sx1600-F	0150-5429	1630 mm	1500 mm (59")	1440 mm (56.6")
F01-37Sx2000-F	0150-5430	2030 mm	1900 mm (74.7")	1840 mm (72.4")

*Stroke tolerance: +0 mm/ -5 mm
Guide including end-plates and profile rail

2. Step: Select Slider

Description	Part-No	For Guide
PL01-20x305/260-HP-PF	0150-1427	F01-37Sx300
PL01-20x405/360-HP-PF	0150-1428	F01-37Sx400
PL01-20x505/460-HP-PF	0150-1429	F01-37Sx500
PL01-20x605/560-HP-PF	0150-1430	F01-37Sx600
PL01-20x805/760-HP-PF	0150-1431	F01-37Sx800
PL01-20x1005/960-HP-PF	0150-1432	F01-37Sx1000
PL01-20x1205/1160-HP-PF	0150-1433	F01-37Sx1200
PL01-20x1405/1360-HP-PF	0150-1434	F01-37Sx1400-F
PL01-20x1605/1560-HP-PF	0150-1435	F01-37Sx1600-F
PL01-20x2005/1960-HP-PF	0150-1436	F01-37Sx2000-F

One slider is necessary for each guide.

3. Step: Select type and quantity of Carriage-Kit

Description	Part-No	Description
F01-37S/FWK	0150-5480	Carriage and ground plate for guides <1400 mm
F01-37S/FWK-F	0150-5481	Carriage and ground plate for guides >= 1400 mm

It is possible to run more than one carriage on one guide. Kit includes carriage, adapter plate and all screws to mount stator and carriage.

Note: F01-37S guides equal or longer than 1400 mm need F01-37S/FWK-F carriage kits. The ground plate of the F01-37S/FWK-F is 7 mm thicker than the ground plate of the F01-37S/FWK. That means all mounted parts are moved by 7 mm. See dimensions in brackets on the drawings.

Spare part: Carriage (from SKF) without adapter plate: LLTHC 15 U-T2 P5 Part-No 0150-5265

4. Step: Select type and quantity of Stator

Description	Part-No	
PS01-37Sx60-HP-N-AGI	0150-2549	37 series HP stator with N connector (IP50)
PS01-37Sx120F-HP-N-AGI	0150-2550	37 series HP stator with N connector (IP50)

It is possible to run more than one stator on one guide. Each stator needs its own carriage-kit.
If different stators are ordered, it is necessary to note the assembling sequence of the stators (from left to right) on the guide, viewing angle from the site with the trailing chain (see pictures Design 'cable to the left' or 'cable to the right'.
(e.g. 3 stators in the sequence (from left to right): PS01-37Sx60 / PS01-37Sx60 / PS01-37Sx120)

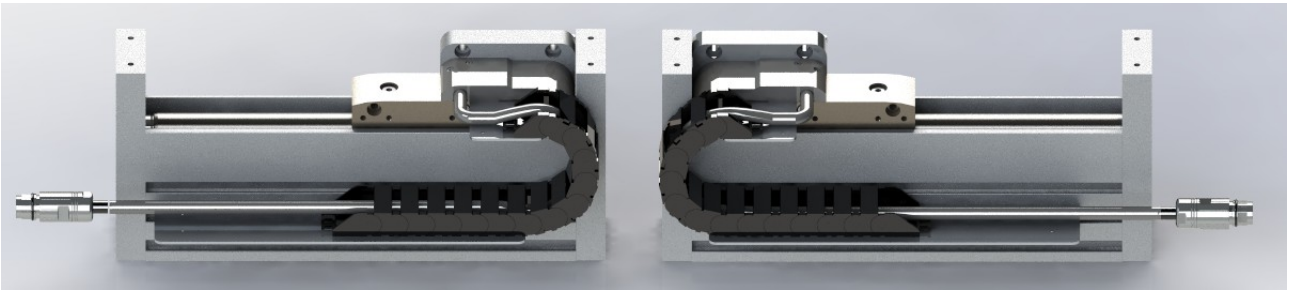

F-Guide assembled 'cable to the left'
Part-No. 0140-0008

F-Guide assembled 'cable to the right' (default)
Part-Np. 0140-0007

5. Step: Select Trailing chain kit or trailing chain (optional)

5.1 Trailing chain kit

Description	Part-No	For Guide	Length of trailing chain
F01-TC300-37	0150-5457	F01-37Sx300	Ca 200 mm
F01-TC400-37	0150-5456	F01-37Sx400	Ca 300 mm
F01-TC500-37	0150-5455	F01-37Sx500	Ca 400 mm
F01-TC600-37	0150-5439	F01-37Sx600	Ca 500 mm
F01-TC800-37	0150-5440	F01-37Sx800	Ca 600 mm
F01-TC1000-37	0150-5441	F01-37Sx1000	Ca 700 mm
F01-TC1200-37	0150-5442	F01-37Sx1200	Ca 800 mm
F01-TC1400-37	0150-5443	F01-37Sx1400-F	Ca 900 mm
F01-TC1600-37	0150-5444	F01-37Sx1600-F	Ca 1000 mm
F01-TC2000-37	0150-5445	F01-37Sx2000-F	Ca 1200 mm

Includes trailing chain and brackets to mount the trailing chain to the stator and the guide. (The kit can not be used for multiple carriage applications).

5.2 Trailing chain

Description	Part-No	For Guide	Length of trailing chain
F01h-KS300	0160-0983	F01-37Sx300	Ca 200 mm
F01h-KS400	0160-0981	F01-37Sx400	Ca 300 mm
F01h-KS500	0160-0982	F01-37Sx500	Ca 400 mm
F01h-KS600	0160-0971	F01-37Sx600	Ca 500 mm
F01h-KS800	0160-0972	F01-37Sx800	Ca 600 mm
F01h-KS1000	0160-0973	F01-37Sx1000	Ca 700 mm
F01h-KS1200	0160-0974	F01-37Sx1200	Ca 800 mm
F01h-KS1400	0160-0975	F01-37Sx1400-F	Ca 900 mm
F01h-KS1600	0160-0976	F01-37Sx1600-F	Ca 1000 mm
F01h-KS2000	0160-0977	F01-37Sx2000-F	Ca 1200 mm

Only trailing chain without any brackets

6. Step: Select Trailing chain cables (high-flex cable)

Description	Part-No	Description	For Motor
KS03-R/N-1.5	0150-3563	Trailing chain cable 1.5 m with R/N-connector	PS01-37Sx60
KS03-R/N-2	0150-3564	Trailing chain cable 2 m with R/N-connector	PS01-37Sx60
KS03-R/N-3	0150-3565	Trailing chain cable 3 m with R/N-connector	PS01-37Sx60
KS05-09-R/N-1.5	0150-3880	Trailing chain cable 1.5 m with R/N-connector	PS01-37Sx120
KS05-09-R/N-2	0150-3881	Trailing chain cable 2 m with R/N-connector	PS01-37Sx120
KS05-09-R/N-3	0150-3882	Trailing chain cable 3 m with R/N-connector	PS01-37Sx120
KS03-R/R-1.5	0150-3566	Trailing chain cable 1.5 m with R/R-connector	PR01-52x40-R/37x120F-...
KS03-R/R-2	0150-3567	Trailing chain cable 2 m with R/R-connector	PR01-52x40-R/37x120F-...
KS03-R/R-3	0150-3568	Trailing chain cable 3 m with R/R-connector	PR01-52x40-R/37x120F-...
KS03-C/C-1.5	0150-3569	Trailing chain cable 1.5 m with C/C-connector	PR01-52x40-R/37x120F-..
KS03-C/C-2	0150-3570	Trailing chain cable 2 m with C/C-connector	PR01-52x40-R/37x120F-..
KS03-C/C-3	0150-3571	Trailing chain cable 3 m with C/C-connector	PR01-52x40-R/37x120F-..

The trailing chain cable should be as short as possible. Use an extension cable for the connection between the trailing chain cable and the drive.

- PS01-37Sx60 stators which are built into the F01-37S guides need KS03-R/N-.. cables
- PS01-37Sx120 stators which are built into the F01-37S guides need KS05-09-R/N-.. cables
- Trailing change cable max. length is limited up to 3 m
- The rotary part of the PR01-52x40-R/37x120F-..motors or the PS01-23x …-R stators need KS03-R/R-... cables
- The lineary part of the PR01-52x40-R/37x120F-..motors or PS01-37x … -C stators need KS03-C/C-... cables

7. Step: External Sensor-Kit (optional)

Description	Part-No	
F01-37S-SK	0150-5446	Identical for all guides, cable length 2m

The external sensor kit includes sensor MS01-1/D Part- No 0150-1840, sensor adapter plate and mounting screws. The magnetic strip must be ordered separately.

8. Step: Magnetic strip (optional)

Description	Part-No	For Guide
F01-MB300	0150-5454	F01-37Sx300
F01-MB400	0150-5451	F01-37Sx400
F01-MB500	0150-5452	F01-37Sx500
F01-MB600	0150-5431	F01-37Sx600
F01-MB800	0150-5432	F01-37Sx800
F01-MB1000	0150-5433	F01-37Sx1000
F01-MB1200	0150-5434	F01-37Sx1200
F01-MB1400	0150-5435	F01-37Sx1400-F
F01-MB1600	0150-5436	F01-37Sx1600-F
F01-MB2000	0150-5437	F01-37Sx2000-F

Only one magnetic strip is needed for several motors with external position sensor kits to run on one guide.

9. Step: Adapter plate for linear rotary motors (optional)

Description	Part-No	For linear rotary motors
F01k-PR01-52	0160-2536	PR01-52x40-R/37x120F-HP-C-80 (-L) PR01-52x60-R/37x120F-HP-C-100 (-L)
F01k-PR01-52x60	0160-2657	PR01-52x60-R/37x120F-HP-C-100 (-L) PR01-52x60-R/37x120F-HP-C-150 (-L)
F01k-PR01-84*	0160-2594	PR01-84x80-C/48x240F-C100 (-L) (-G0x) PR01-84x80-C/48x360F-C100 (-L) (-G0x)

The adapter plats must be mounted to a F01-37S/FWK or F01-37S/FWK-F carriage kit.

Note: H01-23x.. , H01-37x... and B01-23x.. , B01-37x.. -guides can directly be mounted to the F01-37S/FWK or F01-37S/FWK-F carriage kit.

10. Step: Nuts for T-Slot (optional)

Description	Part-No	
Nut N8 / M4	0150-2189	Nut for 8 mm slots of F01 guides with M4 thread
Nut N8 / M6	0150-2558	Nut for 8 mm slots of F01 guides with M6 thread

Dimensions see drawings

Order example:

Example 1: F01-37S guide shorter than 1400 mm

pcs	Description	Part-No	comment
1	F01-37Sx800	0150-5425	F01-37S guide 800 mm
1	PL01-20x805/760-HP	0150-1431	Slider HP for F-guidance
1	F01-37S/FWK	0150-5480	Carriage kit (Guide <1400 mm)
1	PS01-37Sx120F-HP-N-AGI	0150-2550	Stator (linear motor)
1	F01-TC800	0150-5440	Trailing chain kit
1	KS03-R/N-2	0150-3564	Trailing chain cable 2 m
1	F-Guide assembled 'cable to the left'	0140-0008	

Example 2: F01-37S guide longer than 1400 mm with optional external sensor

pcs	Description	Part-No	comment
1	F01-37Sx1600-F	0150-5429	F01-37S guide 1600 mm
1	PL01-20x1605/1560-HP-PF	0150-1435	Slider HP for F-guidance
1	F01-37S/FWK-F	0150-5481	Carriage kit (guide >= 1400 mm)
1	PS01-37Sx60-HP-N-AGI	0150-1549	Stator (linear motor)
1	F01-TC1600	0150-5444	Trailing chain kit
1	KS03-R/N-2	0150-3564	Trailing chain cable 2 m
1	F01-37S-SK	0150-5446	External Sensor kit, cable length 2m
1	F01-MB1600	0150-5436	Magnetic Strip for F01-37Sx1600
1	F-Guide assembled 'cable to the right' (default)	0140-0007	

Example 3: F01-37S guide longer than 1400 mm with 3 moving stators

pcs	Description	Part-No	comment
1	F01-37Sx1600-F	0150-5429	F01-37S guide 1600 mm
1	PL01-20x1605/1560-HP-PF	0150-1435	Slider HP for F-guidance
3	F01-37S/FWK-F	0150-5481	Carriage kit (guide >= 1400 mm)
2	PS01-37Sx120F-HP-N-AGI	0150-2550	Stator (linear motor)
1	PS01-37Sx60-HP-N-AGI	0150-1549	Stator (linear motor)
3	KS03-R/N-2	0150-3564	Trailing chain cable 2 m
4	Nut N8 / M6	0150-2558	Nuts for T-Slot to mount the F-Guide
1	Note: Sequence of stators: PS01-37Sx120F / PS01-37Sx120F /PS01-37Sx60F		or Drawing
1	F-Guide assembled 'cable to the right' (default)	0140-0007	Note: S01-37Sx120F
1	F-Guide assembled 'cable to the right' (default)	0140-0007	Note: PS01-37Sx120F
1	F-Guide assembled 'cable to the left'	0140-0008	Note: PS01-37Sx60F

Order Information for Guide F01-48

The guides will be delivered pre-assembled. See section 'Assembling of components' if additional stators or parts must be installed later. Go step by step though the following order procedure:

1. Step: Select F01-48 guide

F01-48x500	0150-5469	540 mm (21.3 in)	200 mm (7.8")	80 mm (3.1")
F01-48x620	0150-5470	660 mm (26.0 in)	320 mm (12.5")	200 mm (7.8")
F01-48x800	0150-5471	840 mm (33.1 in)	500 mm (19.6")	380 mm (14.9")
F01-48x1010	0150-5472	1050 mm (41.3 in)	710 mm (27.9")	590 mm (23.2")
F01-48x1220	0150-5473	1260 mm (49,6 in)	920 mm (36.2')	800 mm (31.4")
F01-48x1400	0150-5474	1440 mm (56.7 in)	1100 mm (43.3")	980 mm (38.5")
F01-48x1610	0150-5475	1650 mm (64.9 in)	1310 mm (51.5")	1190 mm (46.8")
F01-48x1820	0150-5476	1860 mm (73.2 in)	1520 mm (59.8")	1400 mm (55.1")
F01-48x2000	0150-5477	2040 mm (80.3 in)	1700 mm (66.9")	1580 mm (62.2")
F01-48x2210	0150-5478	2250 mm (88,6 in)	1960 mm (77.1")	Not available
F01-48x2450	0150-5479	2490 mm (98.0 in)	2150 mm (84.6")	Not available

2. Step: Select type and quantity of Stators and Flanges

Description	Part-No	
PS01-48x240F-C PS01-48x240F-HP-C PF03-48x226	0150-1220 0150-2991 0150-5489	48 series stator with C connector 48 series HP stator with C connector Flange for PS01-48x240F-C and F01-48 Guide
PS01-48x360F-C PF03-48x346	0150-1269 0150-5490	48 series stator with C connector Flange for PS01-48x360F-C and F01-48 Guide

Each stator needs a flange to be mounted on an a ground plate F01-48/FWK-F.
It is possible to run more than one stator on one guide. Each stator needs its own carriage-kit.
If different stators are ordered, it is necessary to note the assembling sequence of the stators (from left to right) on the guide, viewing angle from the site with the trailing chain (see pictures Design 'cable to the left' or 'cable to the right'.
(e.g. 3 stators in the sequence (from left to right): PS01-48x240F / PS01-48x240F / PS01-48x360F)



F-Guide assembled 'cable to the left'
Part-No. 0140-0008



F-Guide assembled 'cable to the right' (default)
Part-Np. 0140-0007

3. Step: Select quantity of Carriage-Kit

Description	Part-No	Description
F01-48/FWK-F	0150-5488	Kit includes 2 carriages and ground plate

It is possible to run more than one carriage on one guide. Kit includes 2 carriages, ground plate and all screws to mount stator, flange and carriage.

Spare part: Carriage (from SKF) without ground plate:
LLTHC 15 U-T2 P5 Part-No 0150-5265 (2 pcs necessary)

4. Step: Select Slider

Description	Part-No	For Guide
PL01-28x500/420	0150-1382	F01-48x500
PL01-28x620/540	0150-1383	F01-48x620
PL01-28x800/720	0150-1385	F01-48x800
PL01-28x1010/930	0150-1387	F01-48x1010
PL01-28x1220/1140	0150-1388	F01-48x1220
PL01-28x1400/1320	0150-1389	F01-48x1400
PL01-28x1610/1530	0150-1390	F01-48x1610
PL01-28x1820/1740	0150-1395	F01-48x1820
PL01-28x2000/1920	0150-1396	F01-48x2000
PL01-28x2210/2130	0150-1397	F01-48x2210
PL01-28x2450/2370	0150-1398	F01-48x2450

One slider is necessary for each guide.

Description	Part-No	For Guide
PL01-28x500/450-HP	0150-3822	F01-48x500-HP
PL01-28x620/570-HP	0150-3823	F01-48x620-HP
PL01-28x800/750-HP	0150-3825	F01-48x800-HP
PL01-28x1010/960-HP	0150-3827	F01-48x1010-HP
PL01-28x1220/1170-HP	0150-3828	F01-48x1220-HP
PL01-28x1400/1350-HP	0150-3829	F01-48x1400-HP
PL01-28x1610/1560-HP	0150-3830	F01-48x1610-HP
PL01-28x1820/1770-HP	0150-3831	F01-48x1820-HP
PL01-28x2000/1950-HP	0150-3832	F01-48x2000-HP
PL01-28x2210/2160-HP	0150-3833	F01-48x2210-HP
PL01-28x2450/2400-HP	0150-3834	F01-48x2450-HP

One slider is necessary for each guide.

5. Step: Select Trailing chain kit or trailing chain (optional)

5.1 Trailing chain kit

Description	Part-No	For Guide	Length of trailing chain
F01-TC500-48	0150-5498	F01-48x500	Ca 400 mm
F01-TC600-48	0150-5499	F01-48x620	Ca 500 mm
F01-TC800-48	0150-5500	F01-48x800	Ca 600 mm
F01-TC1000-48	0150-5509	F01-48x1010	Ca 700 mm
F01-TC1200-48	0150-5502	F01-48x1220	Ca 800 mm
F01-TC1400-48	0150-5503	F01-48x1400	Ca 900 mm
F01-TC1600-48	0150-5504	F01-48x1610	Ca 1000 mm
F01-TC1800-48	0150-5505	F01-48x1820	Ca 1100 mm
F01-TC2000-48	0150-5506	F01-48x2000	Ca 1200 mm
F01-TC2200-48	0150-5507	F01-48x2210	Ca 1300 mm
F01-TC2400-48	0150-5508	F01-48x2450	Ca 1400 mm

Includes trailing chain and brackets to mount the trailing chain to the stator and the guide. (The kit can not be used for multiple carriage applications).

5.2 Trailing chain

Description	Part-No	For Guide	Length of trailing chain
F01h-KS500	0160-0982	F01-48x500	Ca 400 mm
F01h-KS600	0160-0971	F01-48x620	Ca 500 mm
F01h-KS800	0160-0972	F01-48x800	Ca 600 mm
F01h-KS1000	0160-0973	F01-48x1010	Ca 700 mm
F01h-KS1200	0160-0974	F01-48x1220	Ca 800 mm
F01h-KS1400	0160-0975	F01-48x1400	Ca 900 mm
F01h-KS1600	0160-0976	F01-48x1610	Ca 1000 mm
F01h-KS1800	0160-1011	F01-48x1820	Ca 1100 mm
F01h-KS2000	0160-0977	F01-48x2000	Ca 1200 mm
F01h-KS2200	0160-1012	F01-48x2210	Ca 1300 mm
F01h-KS2400	0160-1013	F01-48x2450	Ca 1400 mm

Only trailing chain without any brackets

6. Step: Select Trailing chain cables (high-flex cable)

PS01-48x240F-C, PS01-48x240F-HP-C PS01-48x360F-C should be used with KS10 trailing chain (high flex) cables.

Description	Part-No	Description	For Drives
KS10-C/C-2	0150-1816	Trailing chain cable 2 m with C/C-connector	Extension cable
KS10-C/C-4	0150-1817	Trailing chain cable 4 m with C/C-connector	Extension cable
KS10-W/C-4	0150-1807	Trailing chain cable W/C, 4 m	E1100, E1200 series
KS10-W/C-5	0150-1860	Trailing chain cable W/C, 5 m	E1100, E1200 series
KS10-W/C-6	0150-1858	Trailing chain cable W/C, 6 m	E1100, E1200 series
KS10-W/C-8	0150-1808	Trailing chain cable W/C, 8 m	E1100, E1200 series
KS10-Y/C-4	0150-2439	Trailing chain cable Y/C, 4 m	C1100, C1200 series
KS10-Y/C-6	0150-2440	Trailing chain cable Y/C, 4 m	C1100, C1200 series
KS10-Y/C-8	0150-2441	Trailing chain cable Y/C, 8 m	C1100, C1200 series

See LinMot databook or e-catalogue for more cable options.

7. Step: External Sensor-Kit (optional)

Description	Part-No	
F01-37S-SK	0150-5446	Identical for all guides, cable length 2m

The external sensor kit includes sensor MS01-1/D Part- No 0150-1840, sensor adapter plate and mounting screws. The magnetic strip must be ordered separately.

8. Step: Magnetic strip (optional)

.

Description	Part-No	For Guide
F01-MB500	0150-5452	F01-48x500
F01-MB620	0150-5461	F01-48x620
F01-MB800	0150-5432	F01-48x800
F01-MB1010	0150-5462	F01-48x1010
F01-MB1220	0150-5463	F01-48x1220
F01-MB1400	0150-5435	F01-48x1400
F01-MB1610	0150-5464	F01-48x1610
F01-MB1820	0150-5465	F01-48x1820
F01-MB2000	0150-5437	F01-48x2000
F01-MB2210	0150-5467	F01-48x2210
F01-MB2450	0150-5468	F01-48x2450

9. Step: Adapter plate for linear rotary motors (optional)

Description	Part-No	For linear rotary motors
F01k-PR01-52x40/60	0160-2536	PR01-52x40-R/37x120F-HP-C-80 (-L) PR01-52x60-R/37x120F-HP-C-100 (-L)
F01k-PR01-52x60-150	0160-2657	PR01-52x60-R/37x120F-HP-C-150 (-L)
F01k-PR01-84	0160-2594	PR01-84x80-C/48x240F-C100 (-L) (-G0x) PR01-84x80-C/48x360F-C100 (-L) (-G0x)

The adapter plats must be mounted to a F01-48/FWK-F carriage kit.

Note: all H- and B-guides can directly be mounted to the F01-48/FWK-F carriage kit.

10. Step: Nuts for T-Slot (optional)

Description	Part-No	
Nut N8/M4	0150-2189	Nut for 8 mm slots of F01 guides with M4 thread
Nut N8/M6	0150-2558	Nut for 8 mm slots of F01 guides with M6 thread

Dimensions: see drawings

Gantry Design

Single axes of gantry design will be delivered pre-assembled. Please note direction of the cables

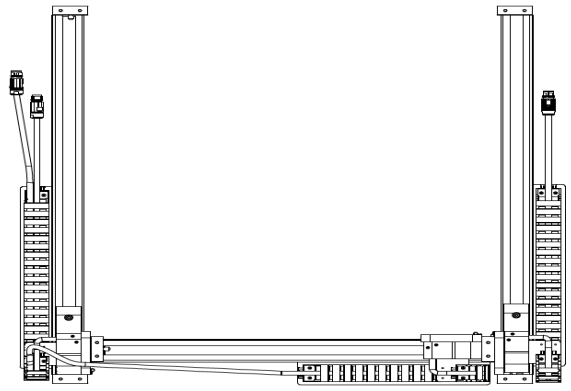

F-Guide assembled 'cable to the left'
Part-No. 0140-0008

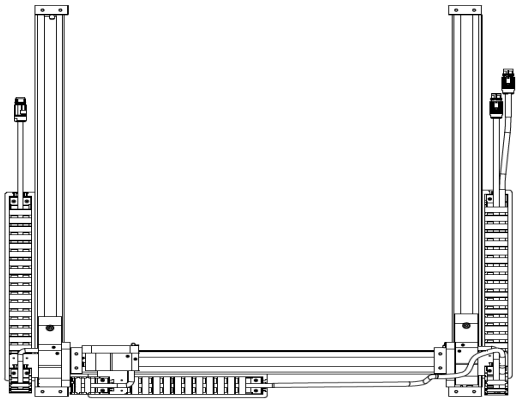

F-Guide assembled 'cable to the right' (default)
Part-No. 0140-0007

Assembly of Gantry design F01-37x Guides

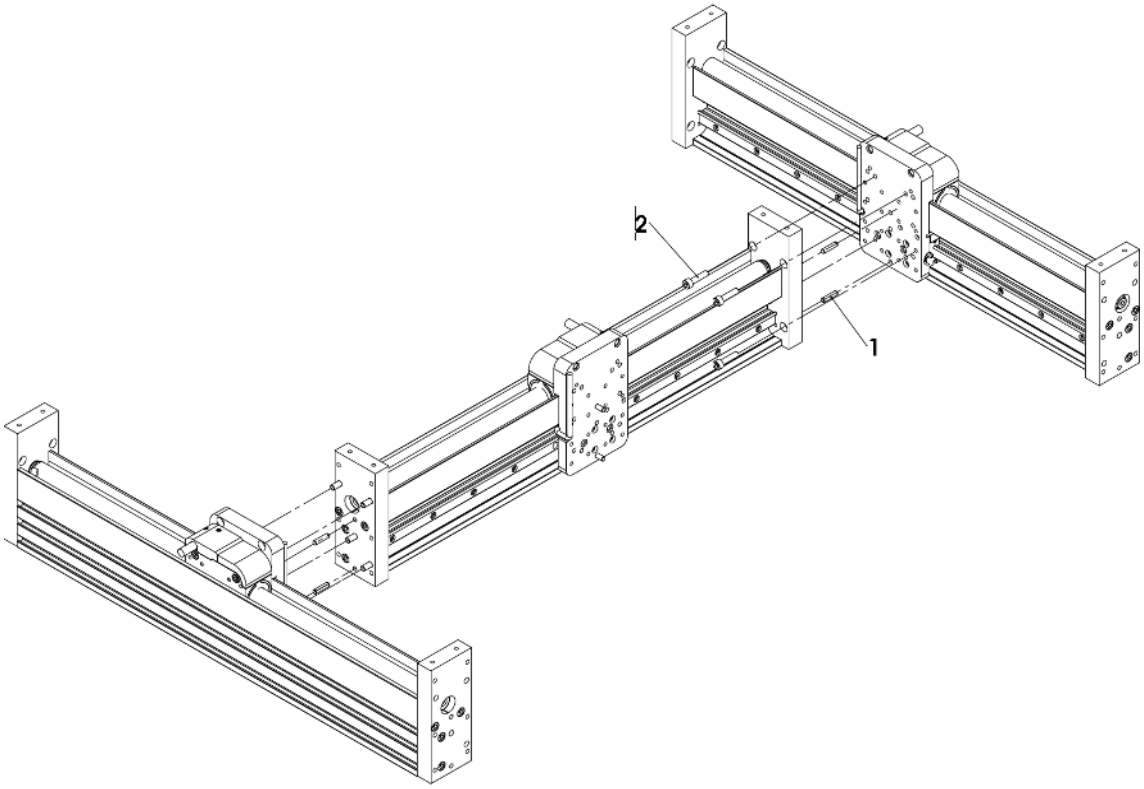

1. Pins 5x20 mm (2 pcs on both sides)
2. Screws M6x25 (4 pcs on both sides)

Assembly of Gantry design F01-48x Guides

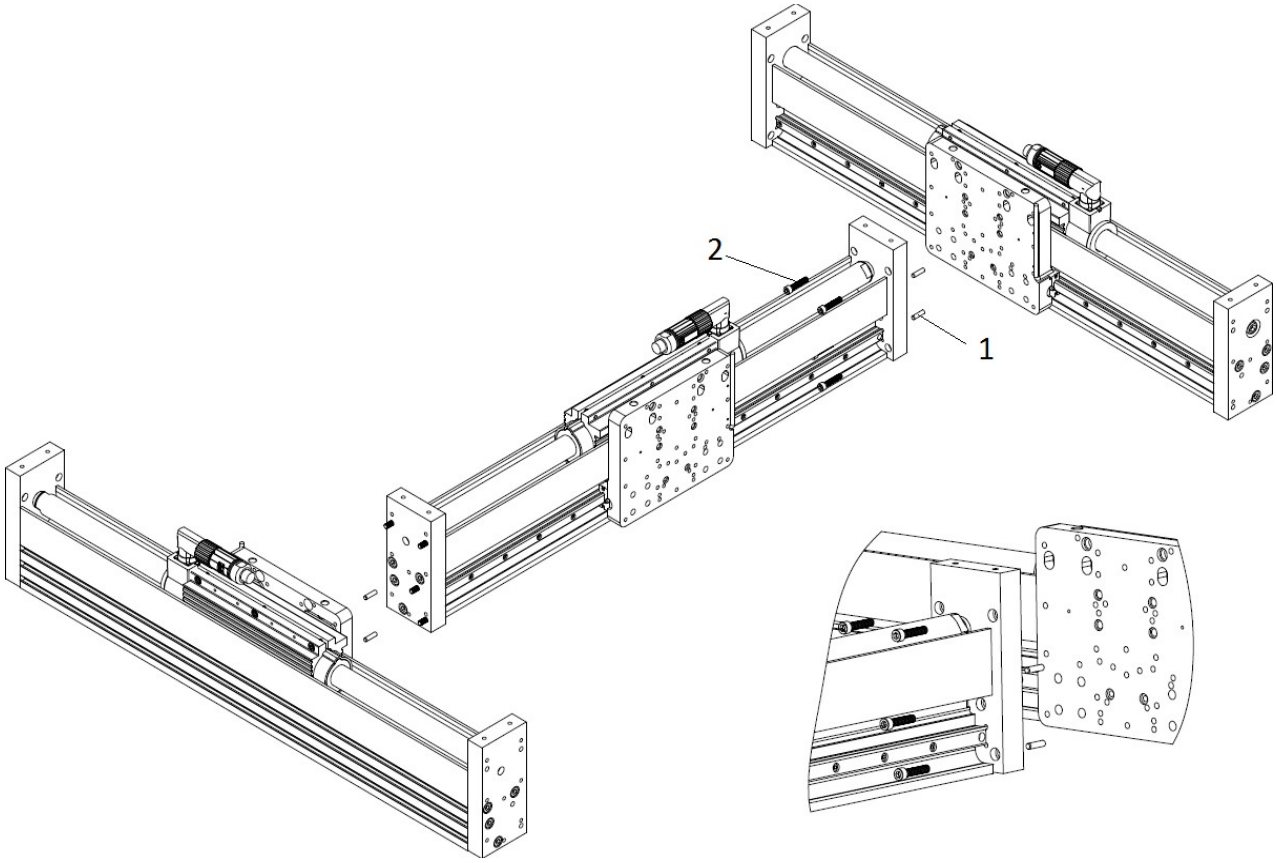

1. Pins 5x20 mm (2 pcs on both sides)
2. Screws M6x35 (4 pcs on both sides)

Combination of F01-48 and F01-37S guides

F01-37 guides can directly be mounted to the bigger F01-48 guides. It is also possible to realize semi gantry constructions as shown below.

Semi gantry design

Semi gantry designs are very cost effective solutions. It is possible to realize a semi gantry without an additional X-guide as long as the F01-37 guide is short (max 400 mm) and some vibrations are acceptable. However in high performance applications, heavy load conditions, or long Y-axis strokes an additional X-guide must be considered.



Semi gantry design: F01-48 guide (X-axis), short F01-37 guide (y-axis), H01-23 guide (Z-axis)



Semi gantry design: F01-48 guide (X-axis), F01-37S guide (Y-Axis) with additional X-guide to eliminate vibrations, H01-23 guide (Z-axis)

Assembly of Semi gantry design

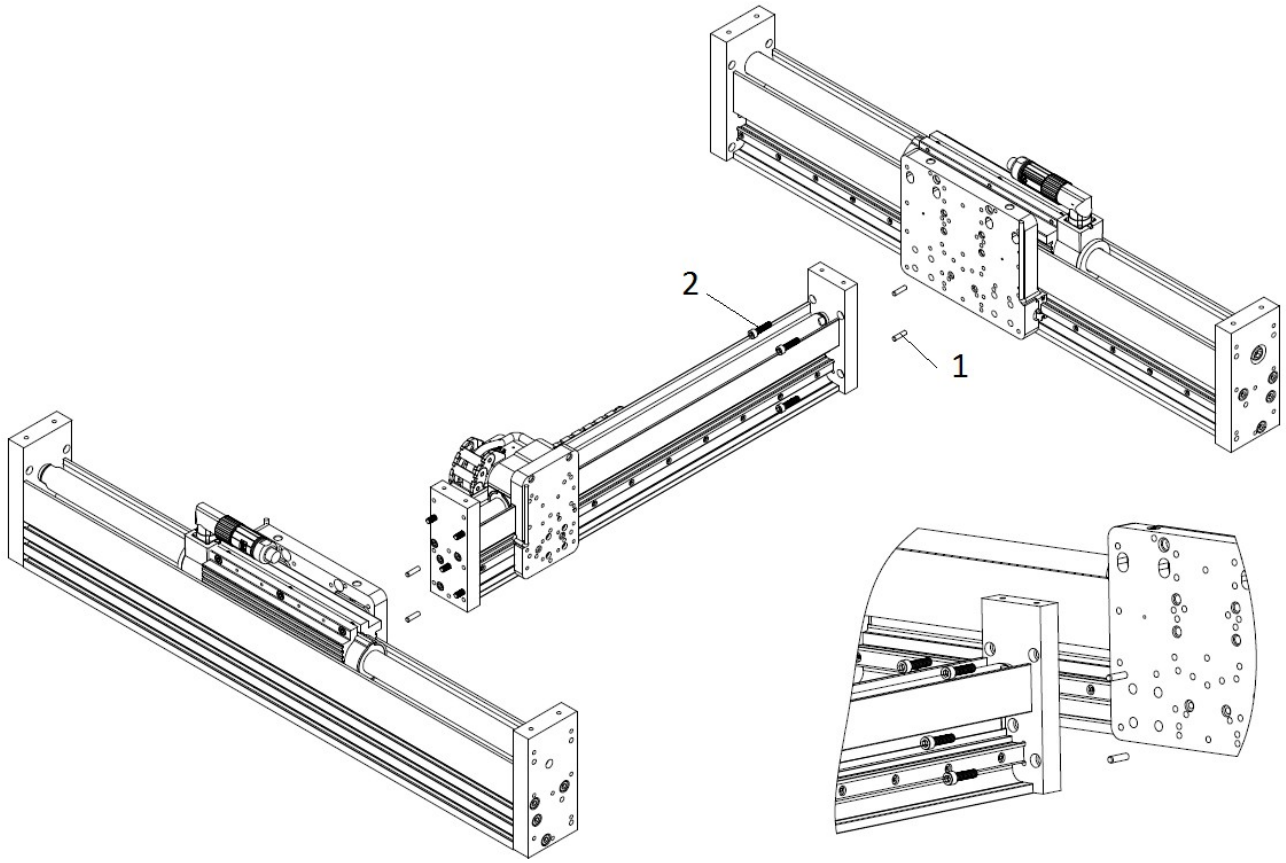

1. Pins 5x20 mm (2 pcs)
2. Screws M6x30 (4 pcs)

Multiple carrier design example

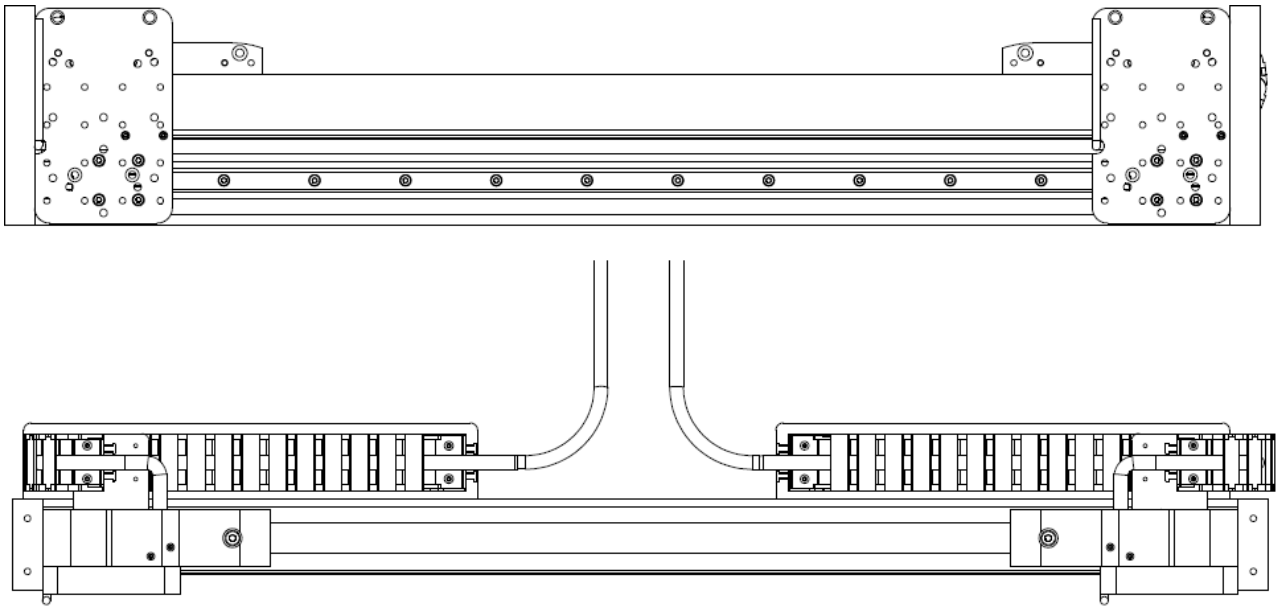

Fig 1 and 2: The picture shows possibility to arrange the trailing chains for a multiple carrier design with available adapters.

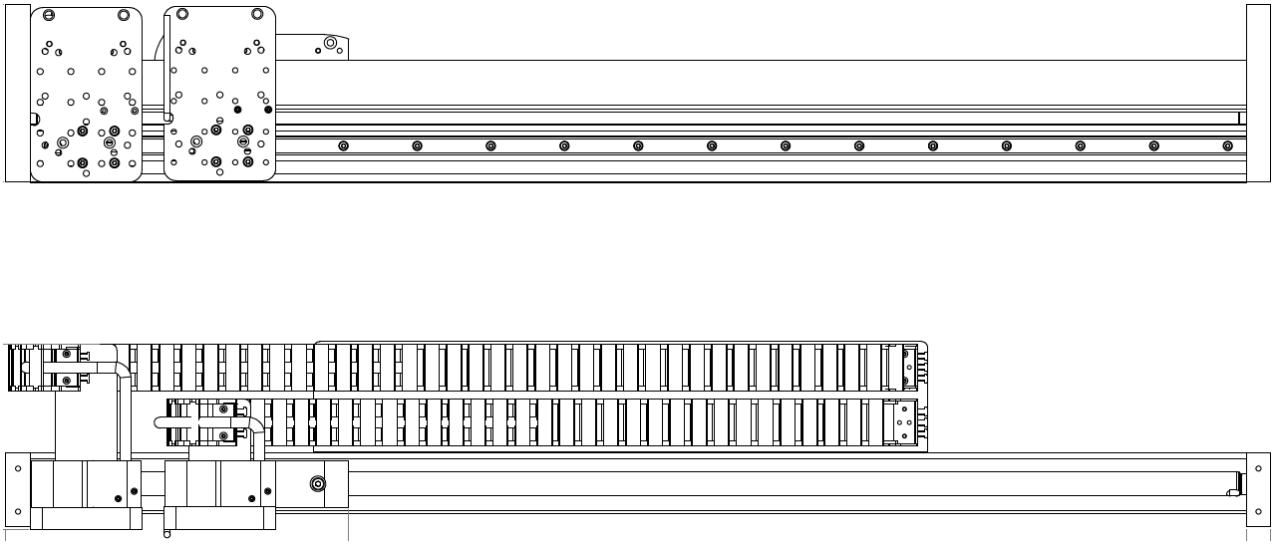

Fig 3 and 4: The picture shows another possibility to arrange the trailing chains for a multiple carrier design. Because of the huge number of design variations the adapters must be produced by the customer.

Mounting instructions

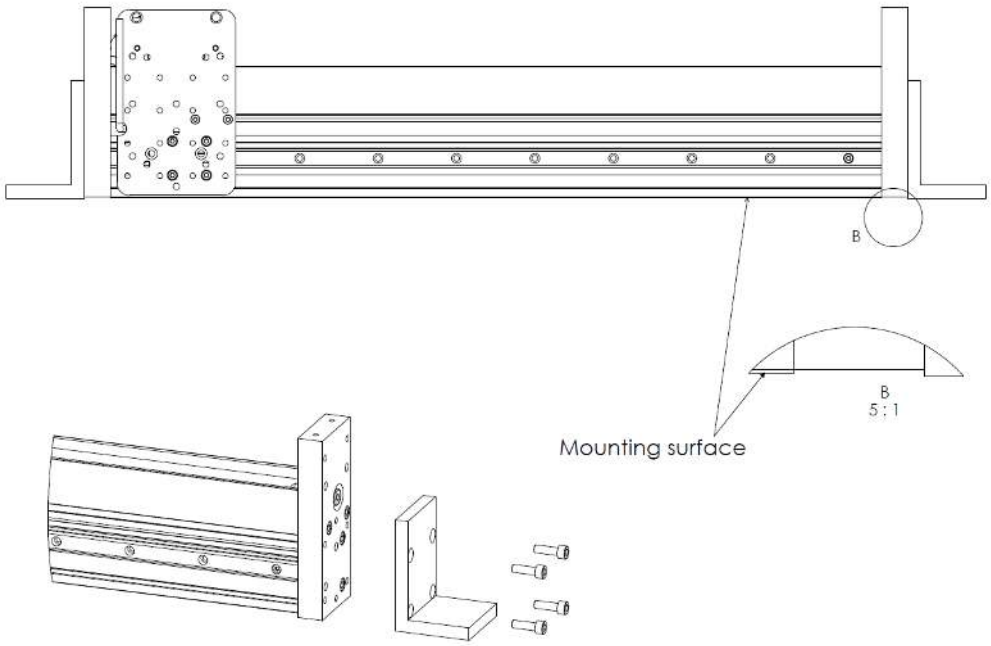

Mounting by side plates

Note: To get the best accuracy and alignment, it is important that the extrusion profile of the guide is pressed to the reference surface and not the end plates.

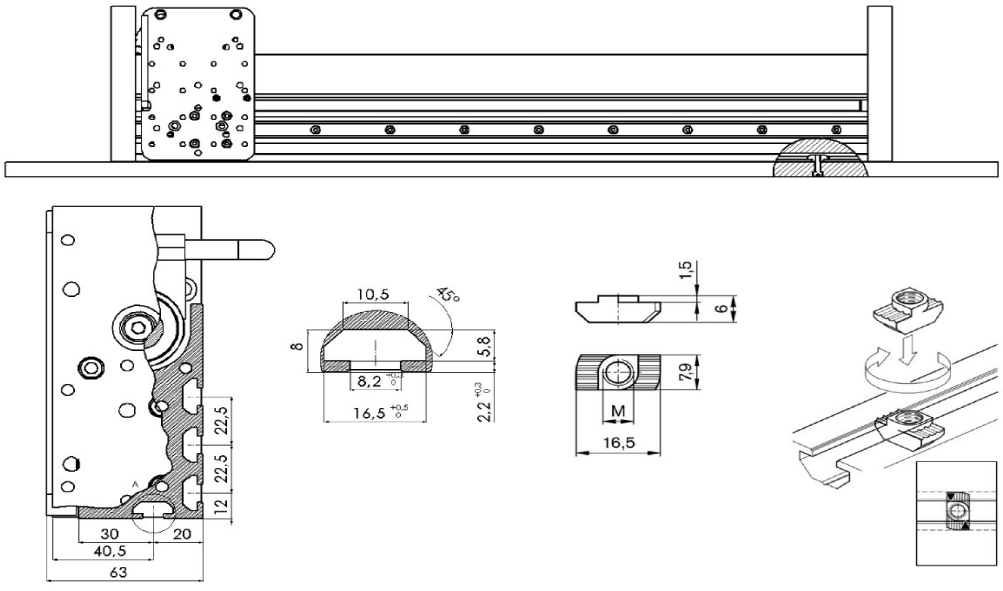

Mounting 'from the bottom' with nuts and T-slots. Orientation: “Slider to the top”

Note: F01-37S and F01-48 guides, which are 1400 mm or longer, must be mounted with the “slider to the top”, as shown in the drawings. Shorter guides can be mounted in every direction. In this case the user has to mount the trailing chain cables corresponding.

Assembling Instructions

F01-37 guides will normally be delivered completely assembled. In case of replacements or if additional carriages/motors should be installed the following installation guides must be considered. Use always threadlocker.

Direction of the motor cable

According to the application and trailing chain installation of the motor cable, the outlet must be selected. See installation guide of the short stators PS01-37Sx... for details.

Assembly and disassembly of the motors and carriages

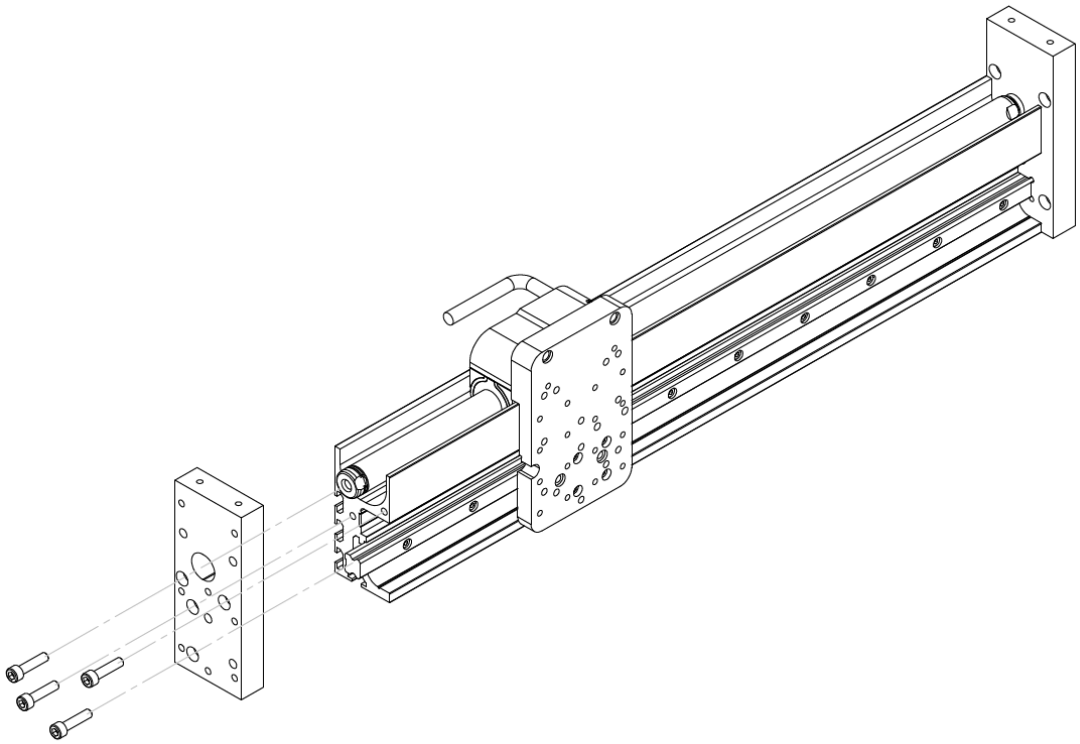

Disassemble the end plate from the side where the slider is in the loose bearing (not fixed by the screw). Support the slider with non-iron parts so that it can not fall into the guide and remove the end plate.

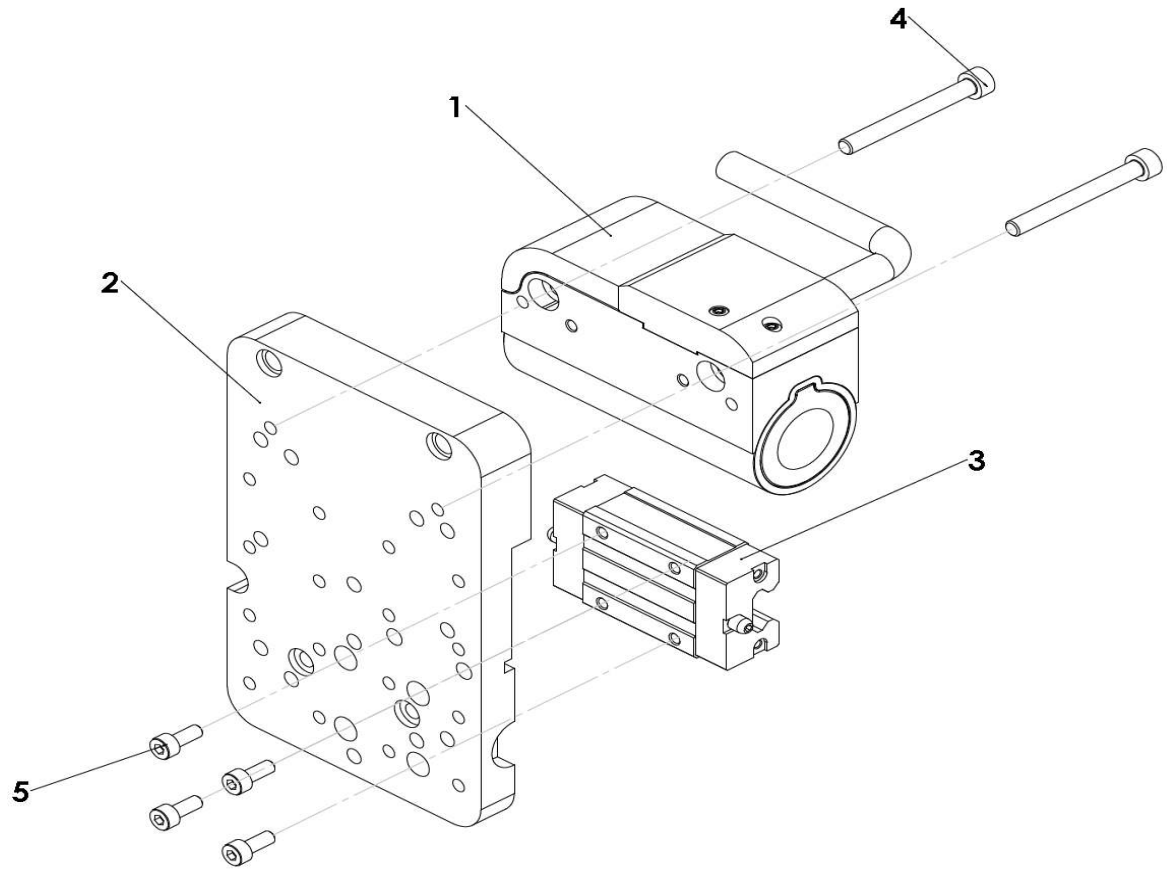

1. Move the carriage (3) carefully on the profile rail. Mount adapter plate (2) with screws 5 (M4x8) to the carriage. Make sure that the adapter plate (2) is aligned to the profile rail (use 90° bracket) ! Now tighten screws 5.
   Mount stator (1) with screws 4 (M5x45) to the adapter plate (2). (The direction of the stator may depend on the needs of the application).

2. Assemble end plate with screws M6x25

3. Loosen screws 4 to align the stator. Move the carriage unit to the loosen bearing side of the guide. Then tighten screws 4 .

4. Move carriage unit to the side with the fixed bearing and loose screws 4 once again if the carriage shows heavy friction. Re-tighten screws 4.

5. Move the carriage unit to the side with the loose bearing, If the carriage shows heavy friction then loose screws from the end plate and tighten screws again. Loosen screws 4 to align the stator. Move the carriage unit to the loose bearing side of the guide. Then tighten screws 4

6. Move the carriage unit to the side with the fixed bearing, If the carriage shows still heavy friction then loosen the M8 screw of the slider and tight it again. Then start alignment process as written before again (steps 3 to 6).)

Assembly of the slider

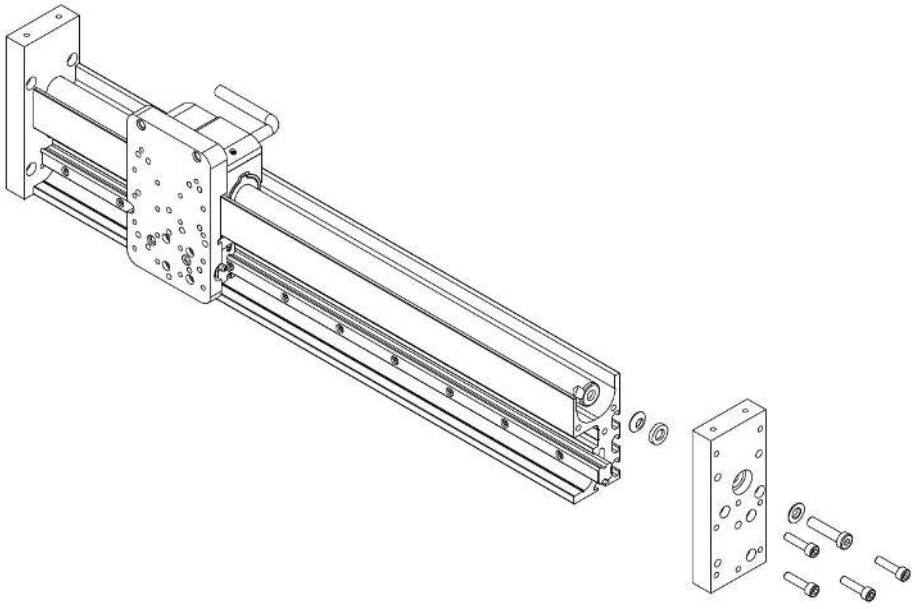

Select the end of the slider without the notches and fasten slider with screw M8x35 to the end plate. Mount spherical washers on both sides of the end plate. Use conical washer on the side of the slider.

Assembly of the railway

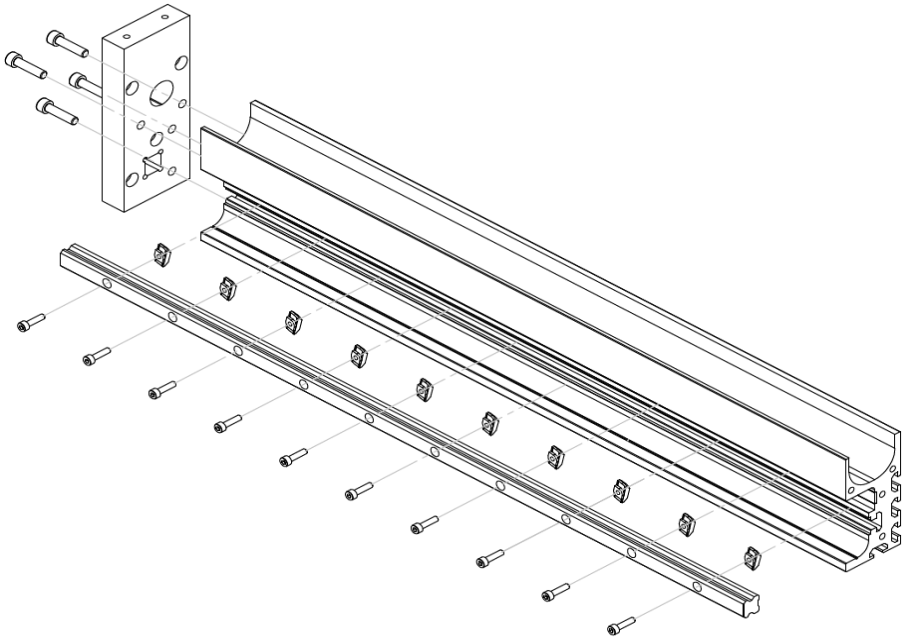

Use M4x16 screws and nuts to mount the railway to the profile. Align the railway with the profile. Every position for the screws must be used.The end plates are mounded with M6x25 screws.

Assembly of Trailing Chain Kit

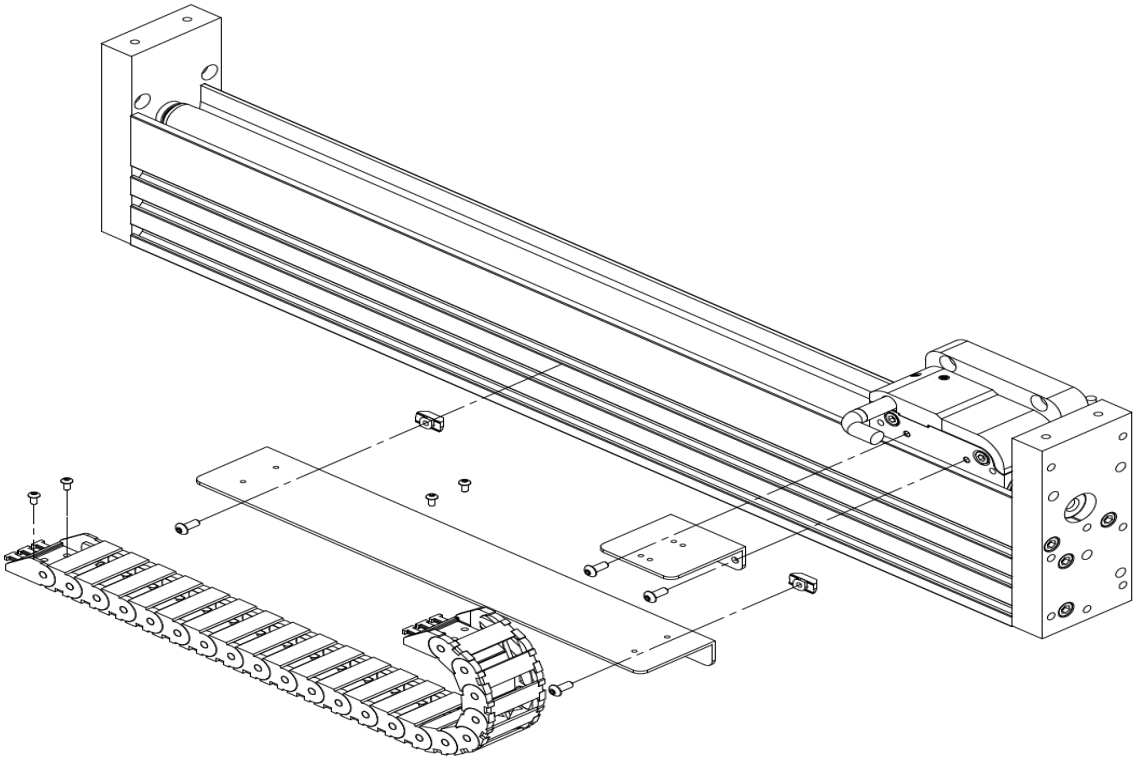

Mount the L-profile with M4x10 screws and nuts into the middle or lower slot of the guide depending on the bend radius of the high flex cables. Mount the adapter to the stator with 2 screws M4x5. Fix the trailing chain to the L-profile and the adapter with 4 screws M3x6.



Trailing chains are located in parallel (side by side) for multiple motor applications. Adapters and L-profiles for the chains are depending on the application and must be designed by the user.

Assembly of an external sensor-kit

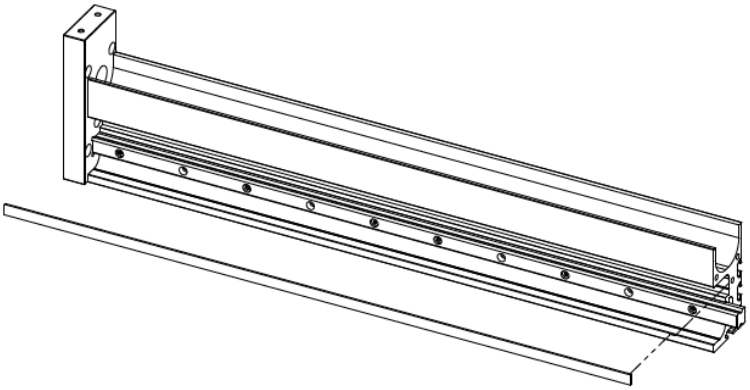

1.) Clean slot on guide profile
2.) Stick magnetic strip into the slot
3.) Screw sensor with 2 pcs M3x12 on the adapter plate and adjust distance according to the installation guide for the external sensor.

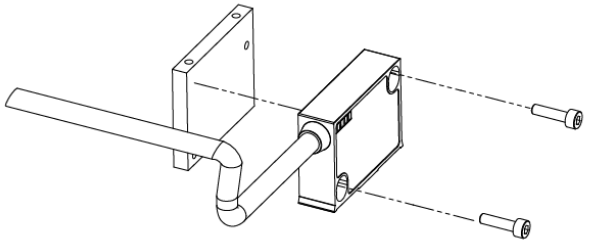

4.) Install adapter with sensor to the backside of the adapter plate (2 pcs M2.5x8) . Secure sensor cable with bracket to the adapter plate (M3x6).

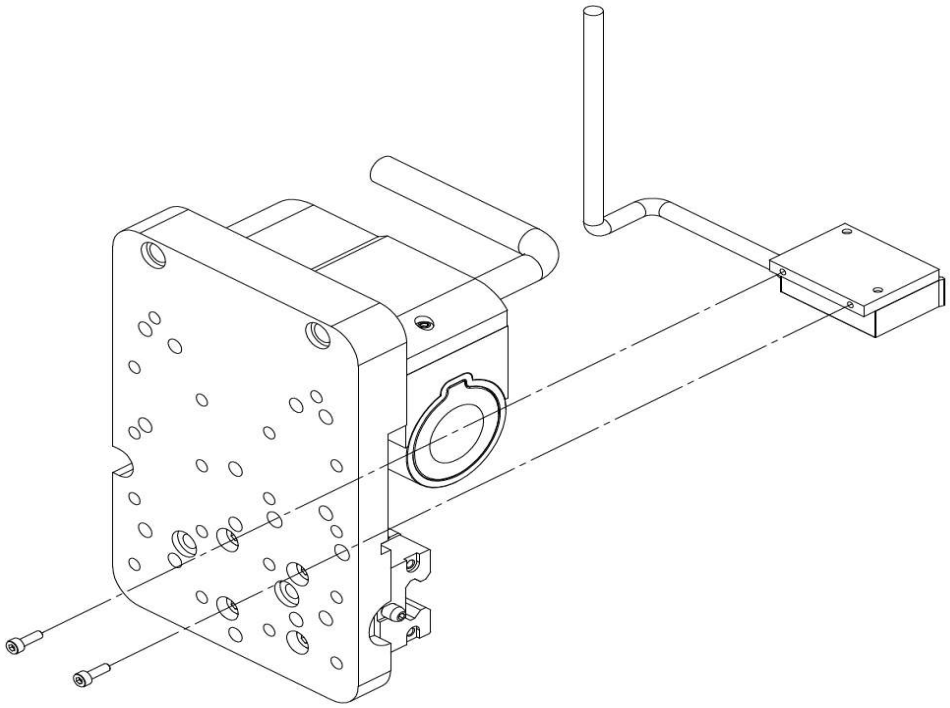

Assembly of an external holding brake (pneumatic)

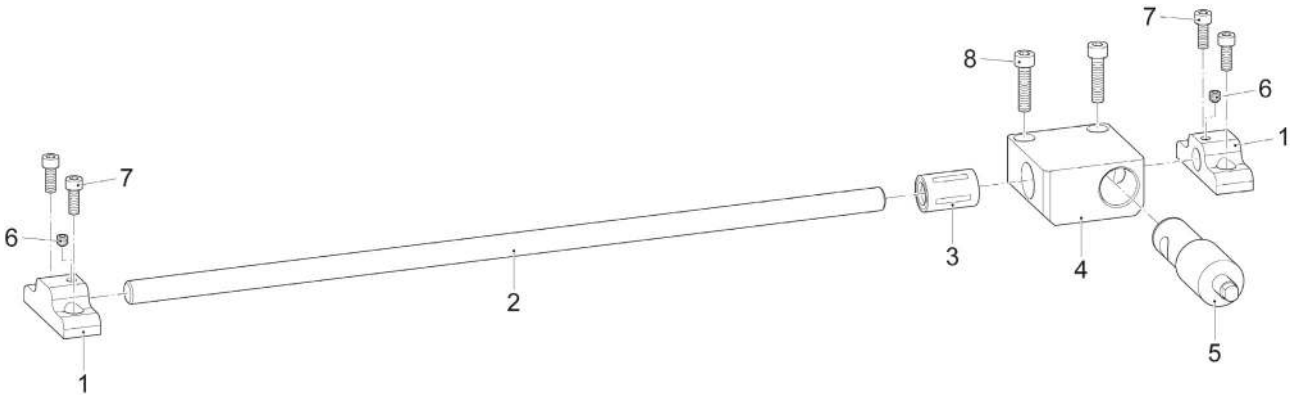

The optional pneumatic break has a holding force of 1000N. It is available for all strokes.

1 Clean slot on guide profile
2 Put the pneumatic ventil over the rod and fix it on the carriage kit
3 Fix it on the side panels and screw it on the F-Module

Bearing load on F01-37S guides

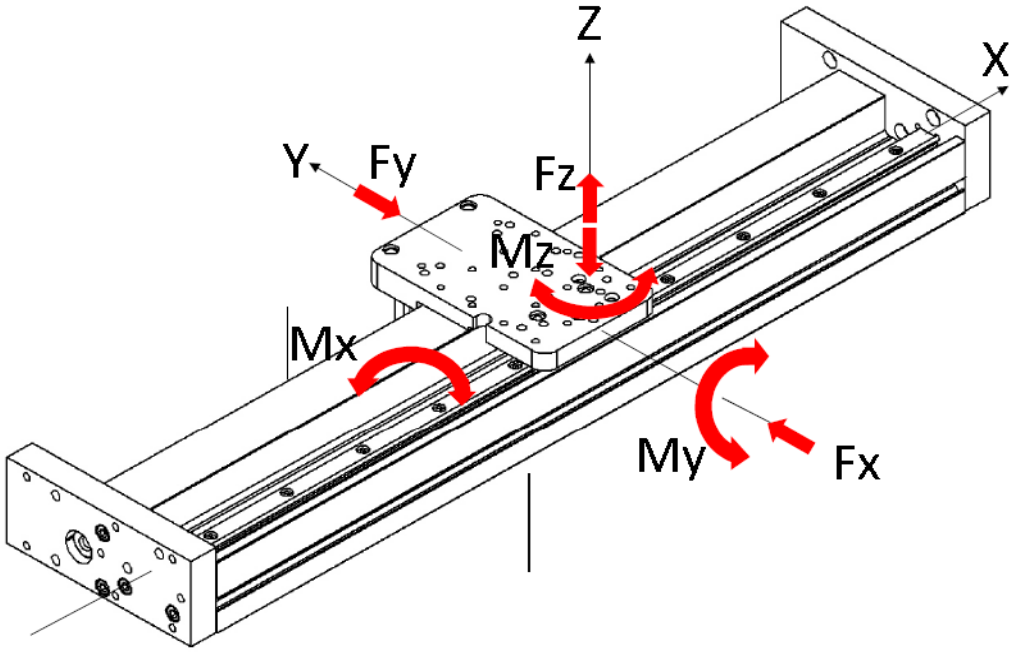

Static and dynamic bearing loads Fx und Fy

F01-37S guide

SKF profile rail guide: LLT Size 15 profil rail, carriage LLTHC 15 U-T2 P5

additional information about lifetime and maintenance. (LLT Size 15 profil rail, carriage LLTHC 15 U-T2 P5)

Load capacity static: C_0:= 15,400 N
Load capacity dynamic: C := 8,400 N

The static and dynamic load bearing will normally not be calculated because a reasonable application will be limited by the motor performance and not the load bearing. To calculate the application data we recommend

If the application shows massive static forces, e.g. if a press is punching on parts which are moved on the guide, then the load bearing must be evaluated carefully.

Calculation of the static load bearing Fx and Fy

To calculate the static bearing load you need the factor f_d for the load condition, the desired static safety factor s0, and the resulting force F_{res}. The static load of the F01-37S guide is: C_0 := 15,400 N

Load condition f_d

Max velocity	v_{max}< 2 m/s :	f_d=1 .....1.5
Max acceleration	v_{max}> 2 m/s:	f_d=1.5 3

static safety factor s_0

normal conditions:	s_0:>= 2
medium vibration or impact loads:	s_0= 3-5
high vibration or impact loads:	s_0>5

resulting Force F_{res}

F_{res} := abs(F_x) + abs(F_y)

Evaluation of the static load

F_{res} := abs(F_x) + abs(F_y) < C_0 /(f_d * s_0)

Sample:

C_0 of the F01-37S guide:	C_0 := 15,400 N
Load in y-direction:	F_{res} := abs(F_y)
Max velocity:	v_{max} = 1.5 m/s --> f_d=1
High vibration or impact loads:	s_0 := 5

F_{res} := abs(F_x) + abs(F_y) < C_0 /(f_d * s_0)
:= abs(F_y) := 15,400 N / (1 *5) := 3,080 N

Note:
The static load bearing must normally not be calculated because it is impossible to move a payload of 308 kg with a P01-37S motor. However impacts from presses must be considered.

Static and dynamic moment load Mxyz

F01-37S guide

Direction of moment	Static	Dynamic
$\mathbf{M_x}$	103 Nm (75.9 lb ft)	56 Nm (41.3 lb ft)
$\mathbf{M_y}$	90 Nm (66.3 lb ft)	49 Nm (36.1 lb ft)
$\mathbf{M_z}$	90 Nm (66.3 lb ft)	49 Nm (36.1 lb ft)

Recommended:
We recommend a tilting moment (Mx) to a maximum of 8Nm.
With more than 8 Nm, the stability is not guaranteed and the live time of the F-guide will be reduced.
Mx=Fx*z [Nm]
If the torque is higher than 8Nm, we recommend a E-Guide (EM01-37 or EM01-48).

To minimize the moment load it is recommended to mount a payload as close as possible to the carriage. In case of overhanging loads the moments must be reviewed.

additional information about lifetime and maintenance. (LLT Size 15 profil rail, carriage LLTHC 15 U-T2 P5).

Electrical connection of th PS01-37S stators

Attention!

Do not connect or disconnect motor while there is power on the servo drive.

Use only double shielded original LinMot cable. Cables from other sources must be checked precisely before commissioning. Incorrect connections can destroy the drive and stator.

Connector Type		N-Connector	
Series		*PS01-37Sx60F-HP-N* *PS01-37Sx120F-HP-N*	
		PIN	**Wire**
Phase1+		4	red
Phase1-		3	pink
Phase2+		2	blue
Phase2-		1	grey
+5V		A	white
GROUND*		B	Inner shield
Sensor Sin		C	yellow
Sensor Cos		D	green
Temp sensor		E	black
SHIELD* of stator and stator cable		Case (cable relief)	Outer shield
Connector on the stator (-cables)		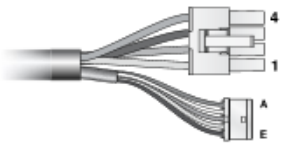	

(The electrical connection of PS01-37Sx60-HP-N-AGI and PS01-37Sx120-HP-N-AGI is identical to the versions PS01-37Sx60-HP-N and PS01-37Sx120-HP-N)

Adapter cables are available with different connectors and in different length. Please find a list of these directly (see contact information on last page).

Installation of the motor cable

Depending on the direction of the cable exit, it may happen that the cables are above the screw holes. It is important to ensure that the screw holes are available before screwing!

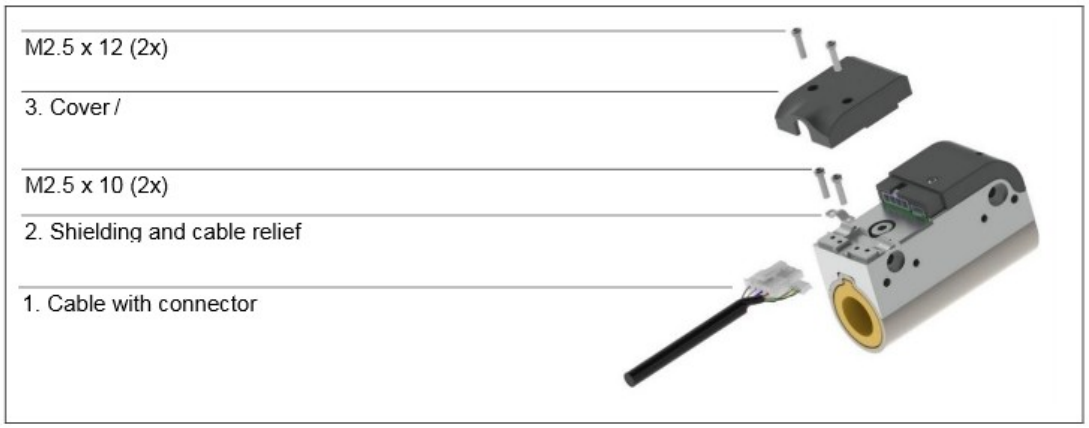

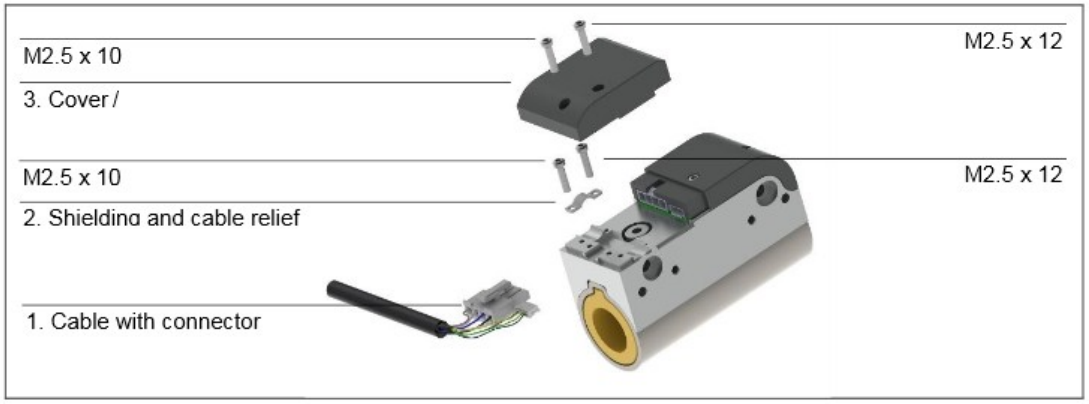

In every case make sure that the cable is properly secured outside of the stator (see arrow!) and the bending radius of the high-flex cable is maintained:

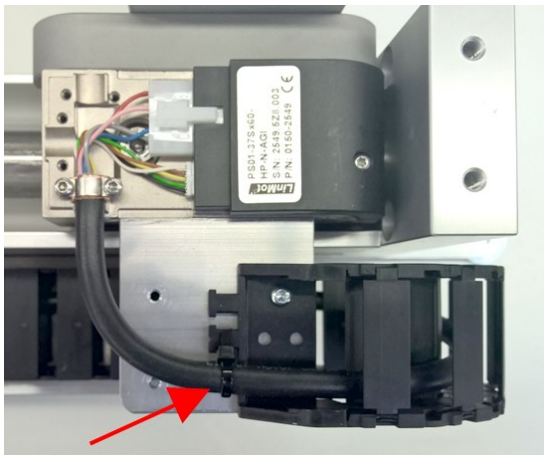

KS03 high flex cable: min. bending for fix installation: 1 inch
min. bending for moving applications: 2 inch

Mounting „long“ Loads on the F-Guide

If 'long’ loads (e.g. the PR01-52x60-R/37x120F-HP-C-150 linear rotary unit) are mounted to an F-guide, an additional guide rail should be used to prevent vibration. The guide may also be necessary if the movements are fast and/or the z-movement includes a high force (e.g. to press a cap on a bottle.) In general, jerk limited profiles should be implemented in all linear motors for all movements.

The guide rail should be installed at the top end of the load. Note that tolerances between the mounting points must be compensated to eliminate any tension

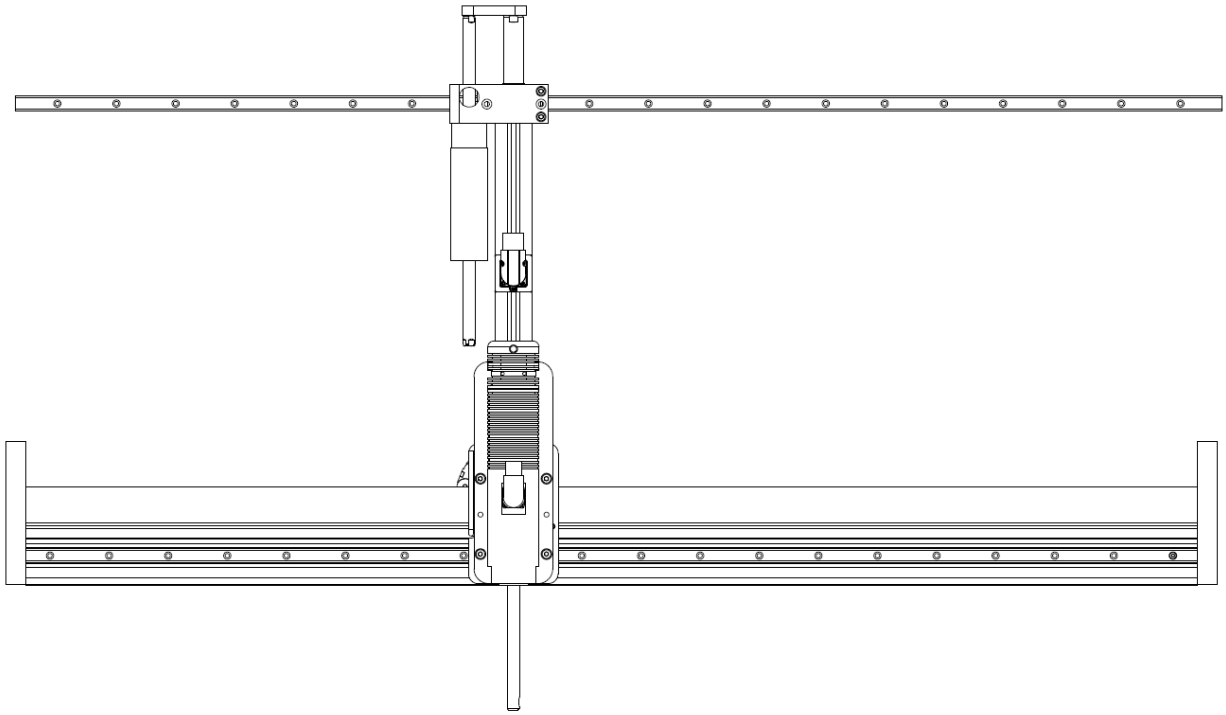

Figure: Additional guide mounted to the top end of the load to prevent vibrations.

Mounting LinMot products on F-Guides

H-Guides, B-Guides and DM-Guides on F01-37x F-Guide

H01-23x Guide / B01-23x Guide

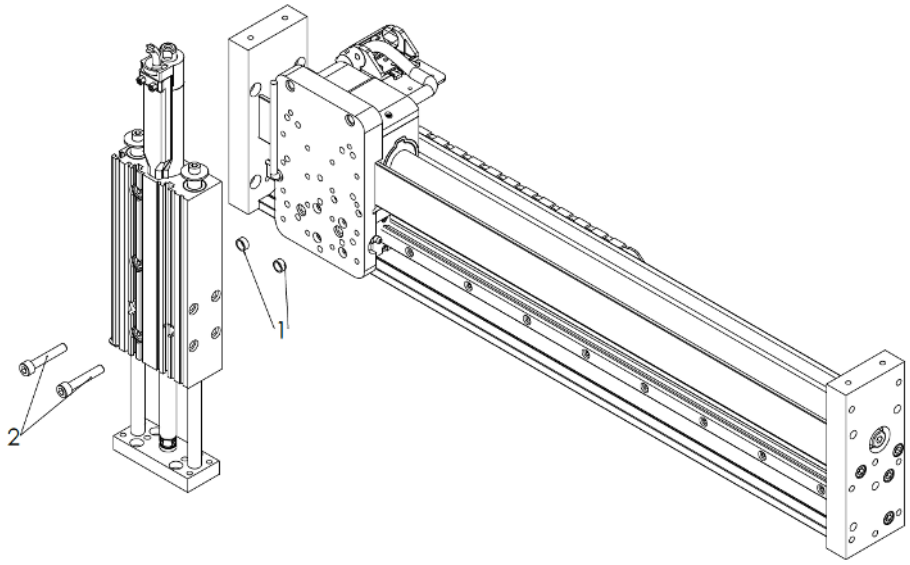

1. Centering sleeve D9x4mm (2 pcs, Part-No. 0150-3251)
2. Screws M6x35 (2 pcs)

H01-37x Guide / B01-37x Guide

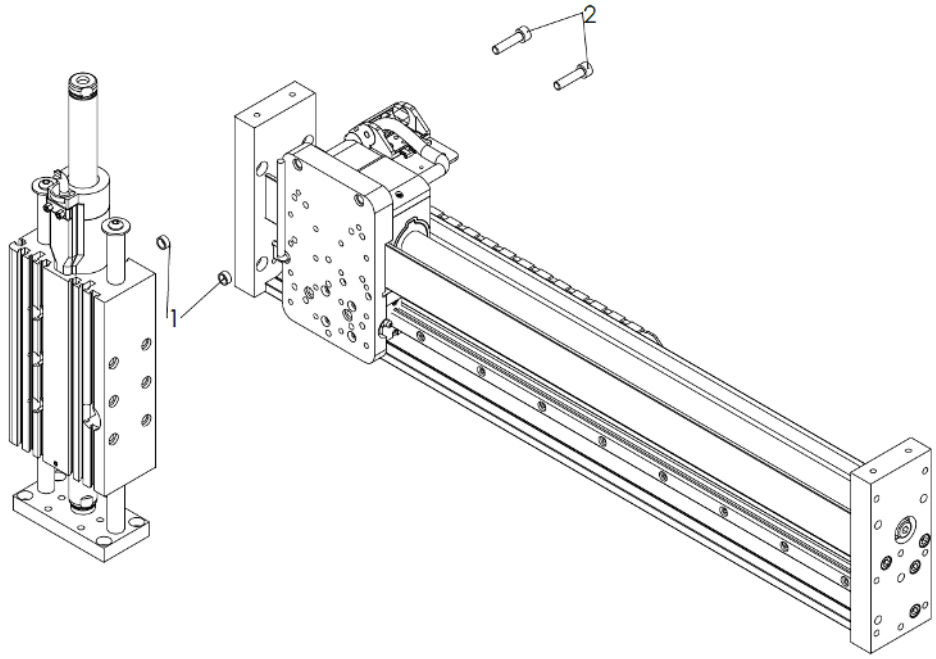

1. Centering sleeve D9x4mm (2 pcs, Part-No. 0150-3251)
2. Screws M6x25 (2 pcs)

DM01-23x Guide

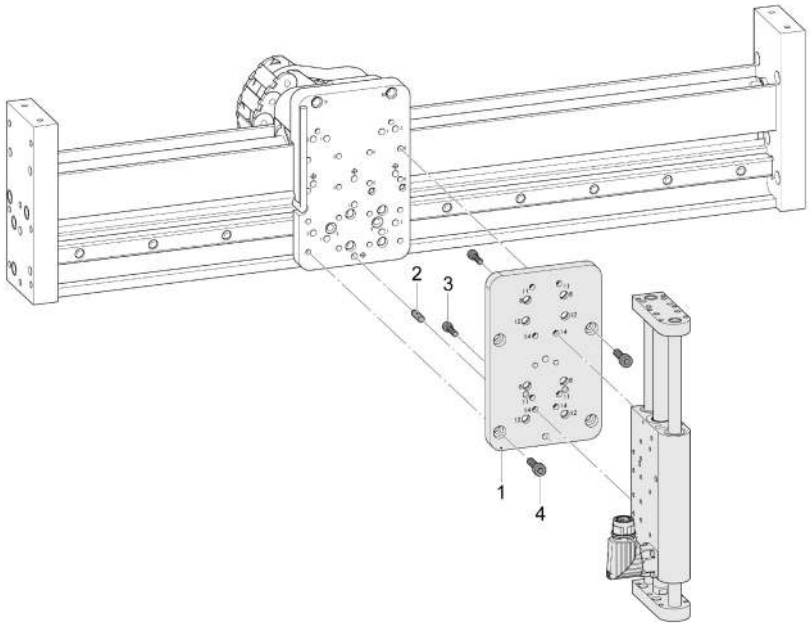

1. Adapter plate MAP-03 (0150-4022) with screws for F01-37S

Linear-Rotary Motors PR01- on F01-37x F-Guide

PR01-52x40-R/37x120F-HP-C-80 (-L)

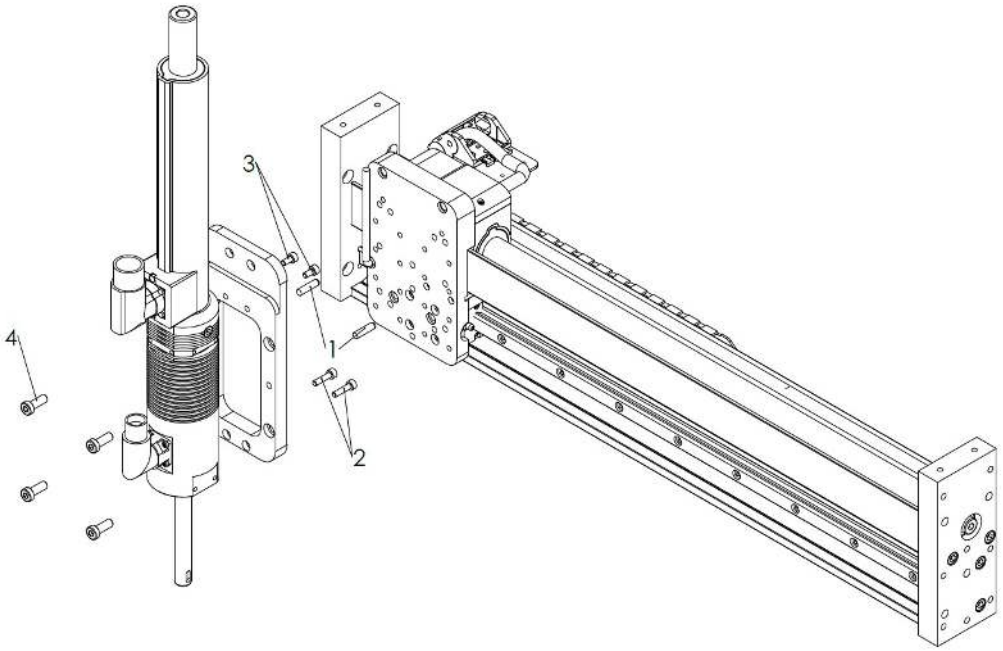

Mounting is done with the adapter plate **F01k-PR01-52x40/60 (Part-No. 0160-2536)**
NOTE: All the mounting parts are already included (1 - 4)

1. Pins 5x20 mm (2 pcs)
2. Screws M4x14 (2 pcs)
3. Screws M4x8 (2 pcs)
4. Screws M6x16 (4 pcs)*

PR01-52x60-R/37x120F-HP-C-100 (-L)

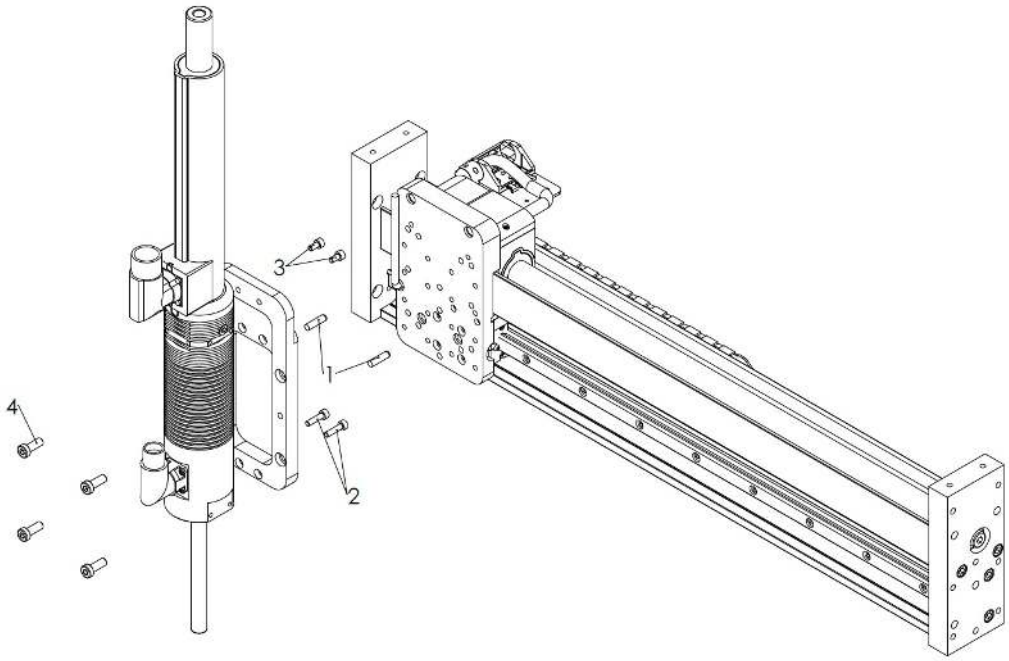

Mounting this part is done with the adapter **F01k-PR01-52x40/60 (Part-No. 0160-2536)**
NOTE: All the mounting parts are already included (1 - 4)

1. Pins 5x20 mm (2 pcs)
2. Screws M4x14 (2 pcs)
3. Screws M4x8 (2 pcs)
4. Screws M6x16 (4 pcs)

PR01-52x60-R-G/37x120F-HP-C-100-G05 (G10)

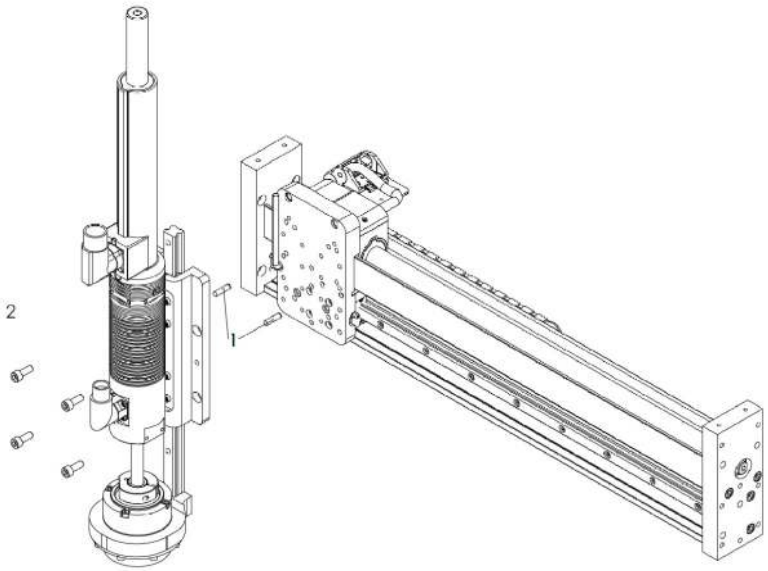

1. Pins 5x20 mm (2 pcs)
2. Screws M6x16 (4 pcs)

NOTE: Additional guide mounted to the top end of the load to prevent vibrations may be required. For more information see chapter Mounting „long“ Loads on the F-Guide.

PR01-52x60-R/37x120F-HP-C-150 (-L)

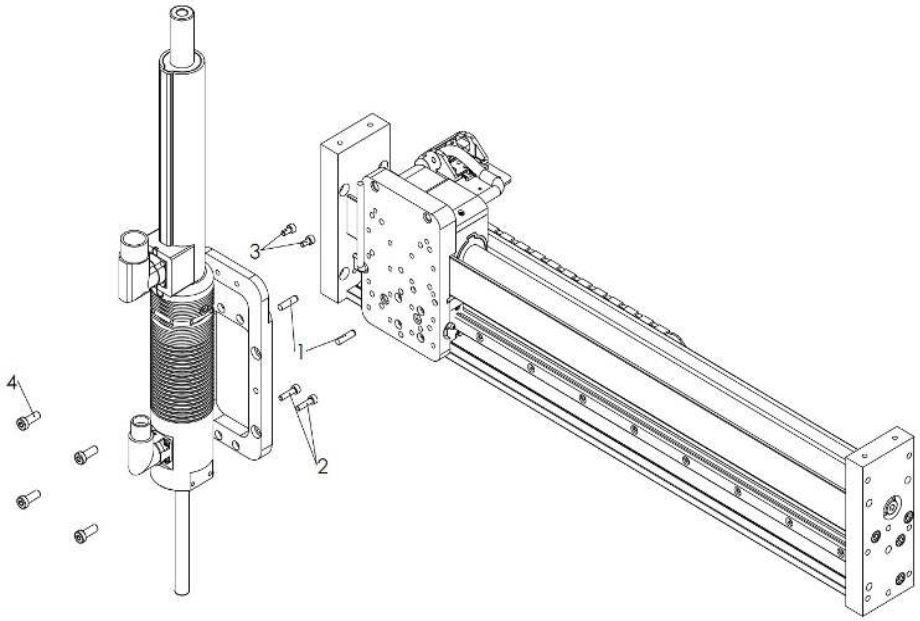

Mounting this part is done with the adapter plate **F01k-PR01-52x60-150 (Part-No. 0160-2657)**
NOTE: All the mounting parts are already included (1 - 4)

1. Pins 5x20 mm (2 pcs)
2. Screws M4x14 (2 pcs)
3. Screws M4x8 (2 pcs)
4. Screws M6x16 (4 pcs)

NOTE: Additional guide mounted to the top end of the load to prevent vibrations may be required. For more information see chapter Mounting „long“ Loads on the F-Guide.

H-Guides and B-Guides on F01-48x F-Guide

H01-23x Guide / B01-23x Guide

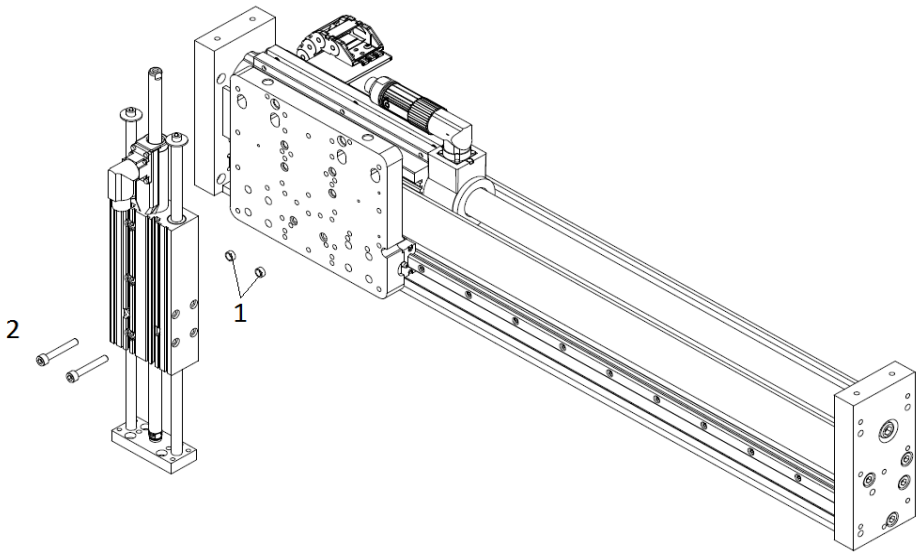

1. Centering sleeve D9x4mm (2 pcs, Part-No. 0150-3251)
2. Screws M6x40 (2 pcs)

H01-37x Guide / B01-37x Guide

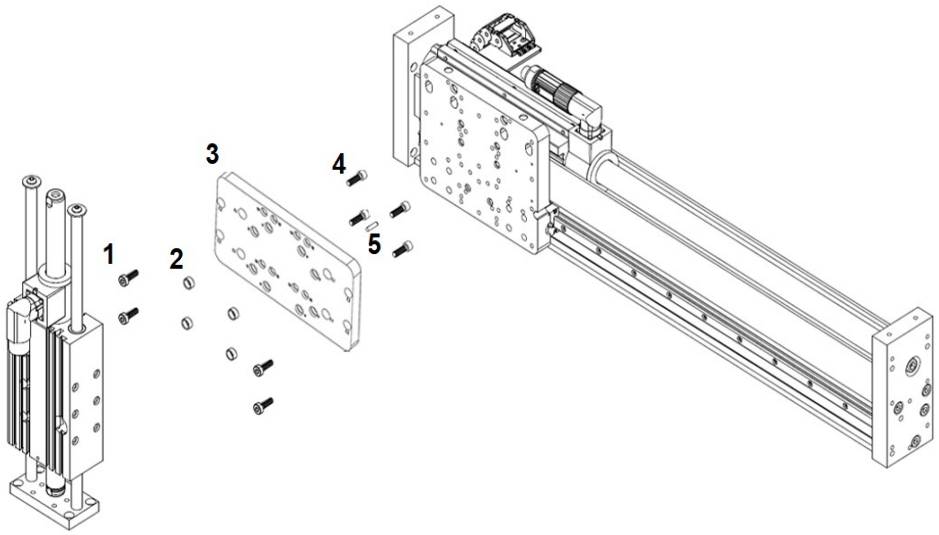

Mounting this part is done with the adapter MAP-02 **(Part-No. 0150-3959)**
NOTE: All the mounting parts are already included (1 - 5)

1. Screws M6x20 (4 pcs)
2. Centering sleeve D9x4mm (4 pcs, Part-No. 0150-3251)
3. Adapter (0160-1713)
4. Screws M6x18 (4 pcs)
5. Pin 5x20 mm (1 pc)

H01-48x Guide / B01-48x Guide

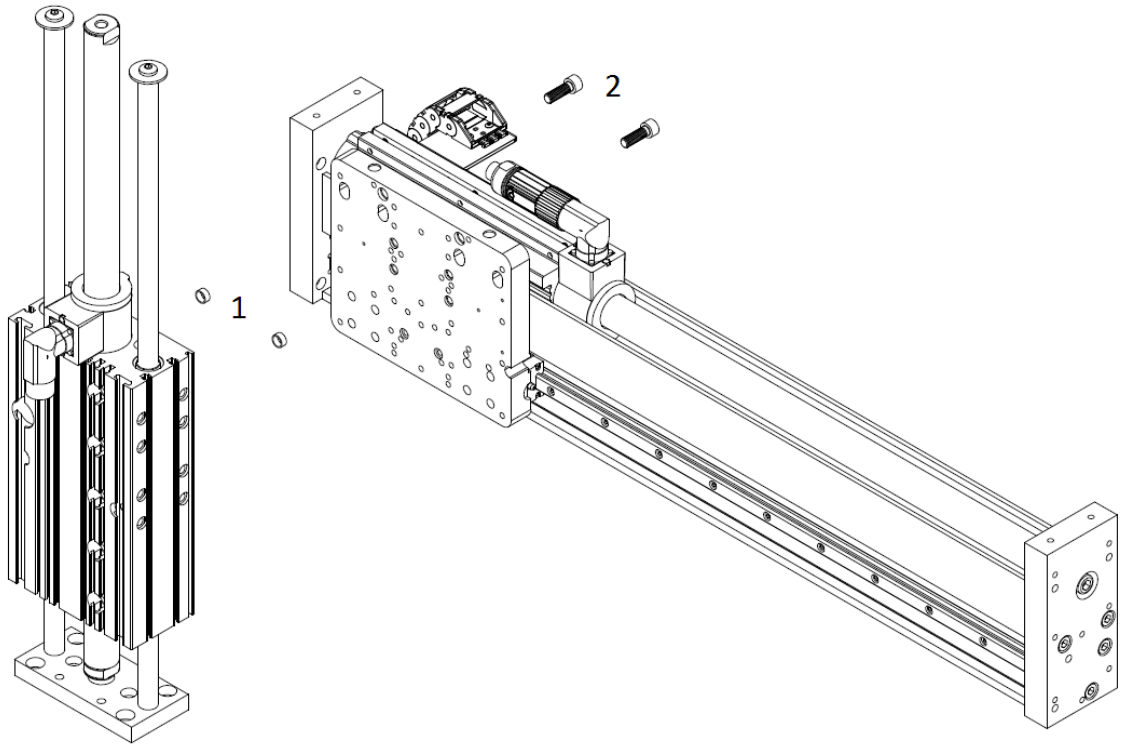

1. Centering sleeve D11x5mm (2 pcs, Part-No. 0150-3252)
2. Screws M8x25 (2 pcs)

Linear-Rotary Motors PR01- on F01-48x F-Guide

PR01-52x40-R/37x120F-HP-C-80 (-L)

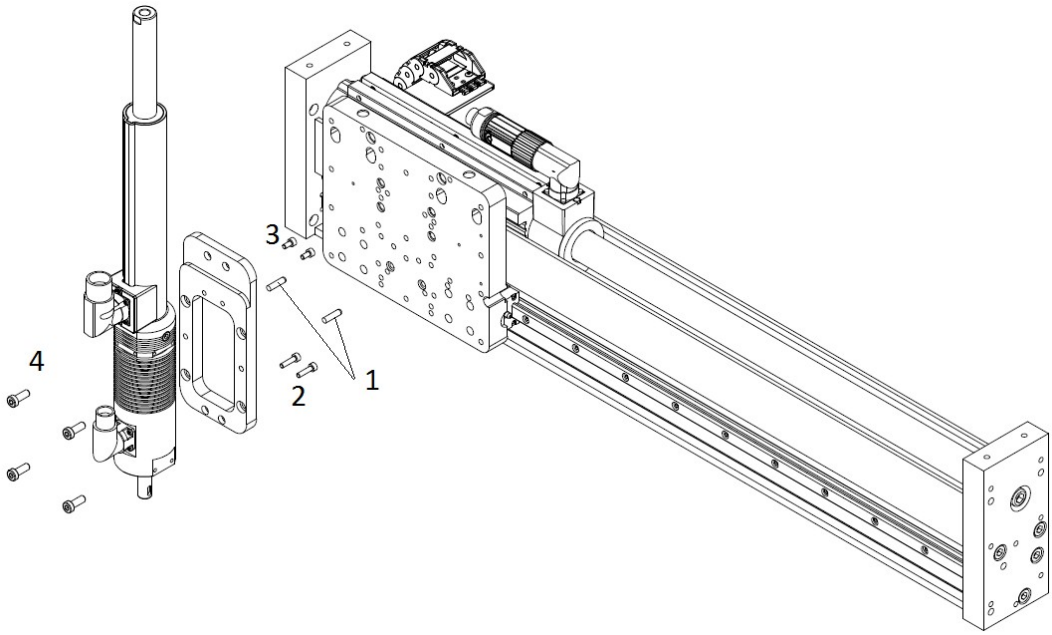

Mounting is done with the adapter plate **F01k-PR01-52x40/60 (Part-No. 0160-2536)**
NOTE: All the mounting parts are already included (1 - 4)

1. Pins 5x20 mm (2 pcs)
2. Screws M4x14 (2 pcs)
3. Screws M4x8 (2 pcs)
4. Screws M6x16 (4 pcs)*

PR01-52x60-R/37x120F-HP-C-100 (-L)

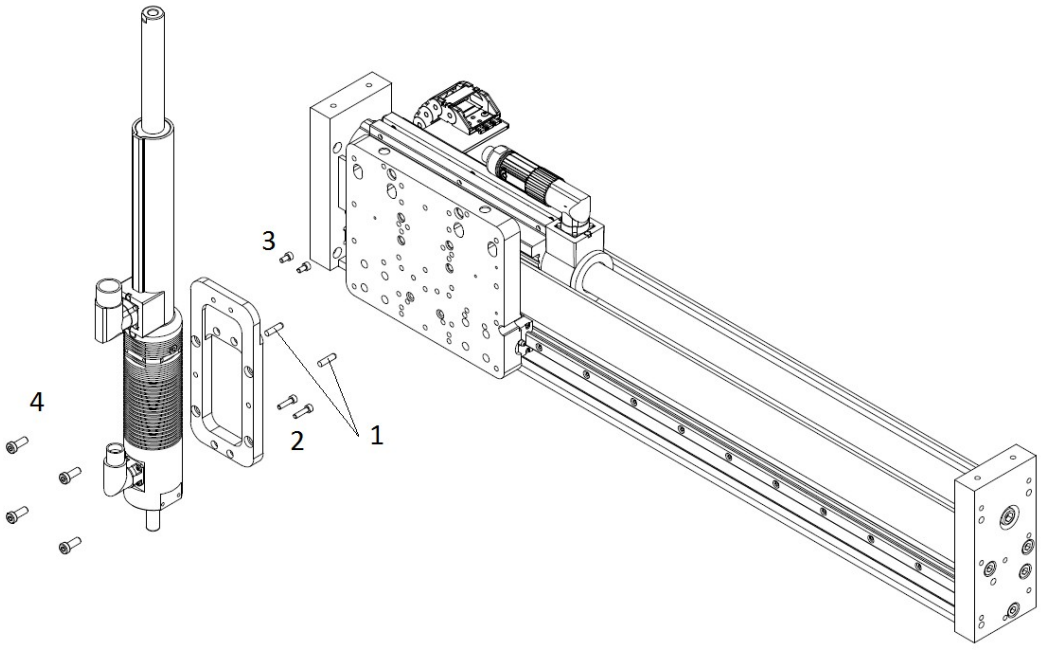

Mounting this part is done with the adapter plate **F01k-PR01-52x40/60 (Part-No. 0160-2536)**
NOTE: All the mounting parts are already included (1 - 4)

1. Pins 5x20 mm (2 pcs)
2. Screws M4x14 (2 pcs)
3. Screws M4x8 (2 pcs)
4. Screws M6x16 (4 pcs)

PR01-52x60-R-G/37x120F-HP-C-100-G05 (G10)

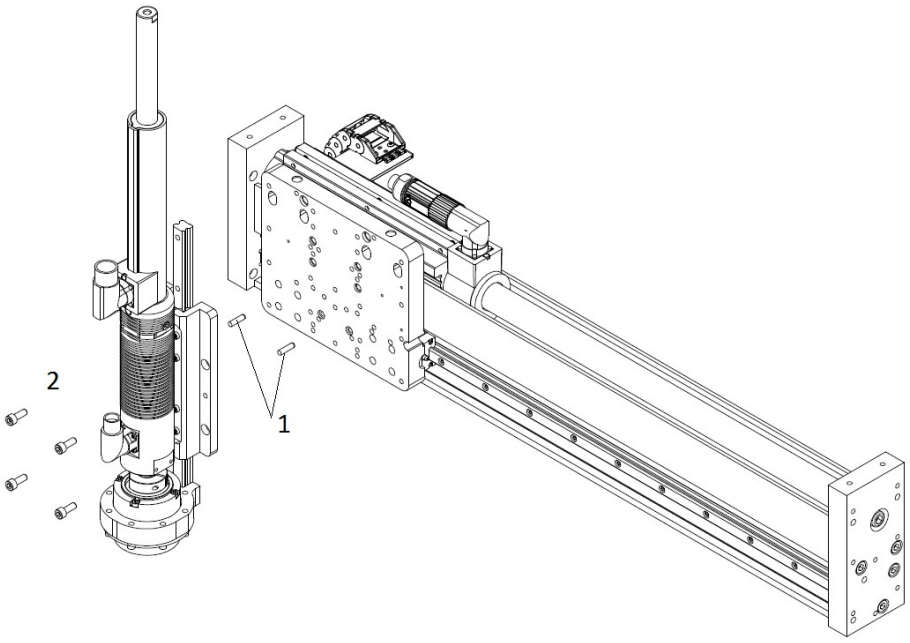

1. Pins 5x20 mm (2 pcs)
2. Screws M6x20 (4 pcs)

NOTE: Additional guide mounted to the top end of the load to prevent vibrations may be required. For more information see chapter Mounting „long“ Loads on the F-Guide.

PR01-52x60-R/37x120F-HP-C-150 (-L)

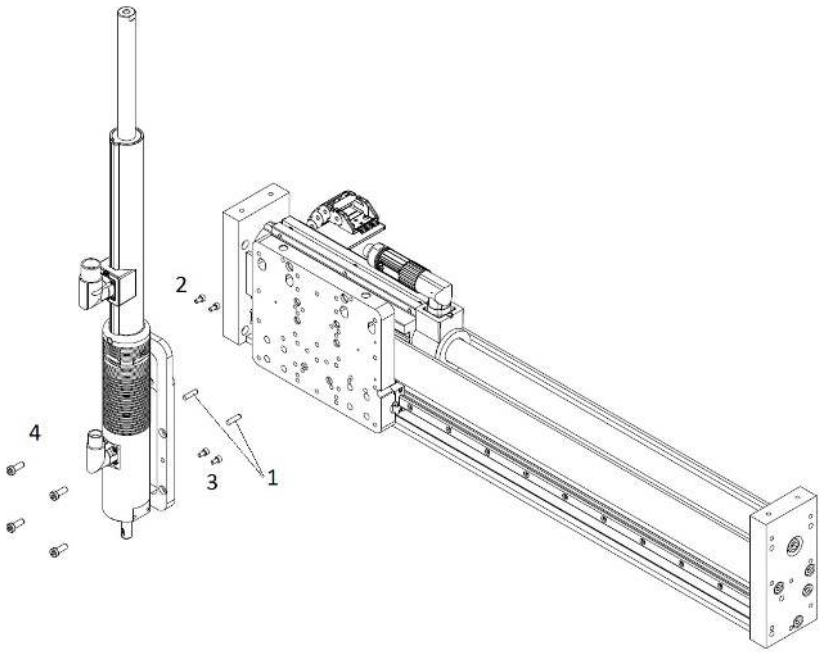

Mounting this part is done with the adapter plate **F01k-PR01-52x60-150 (Part-No. 0160-2657)**
NOTE: All the mounting parts are already included (1 - 4)

1. Pins 5x20 mm (2 pcs)
2. Screws M4x14 (2 pcs)
3. Screws M4x8 (2 pcs)
4. Screws M6x16 (4 pcs)

NOTE: Additional guide mounted to the top end of the load to prevent vibrations may be required. For more information see chapter Mounting „long“ Loads on the F-Guide.

PR01-84x80-C/48xXXF-C-100 (-L)

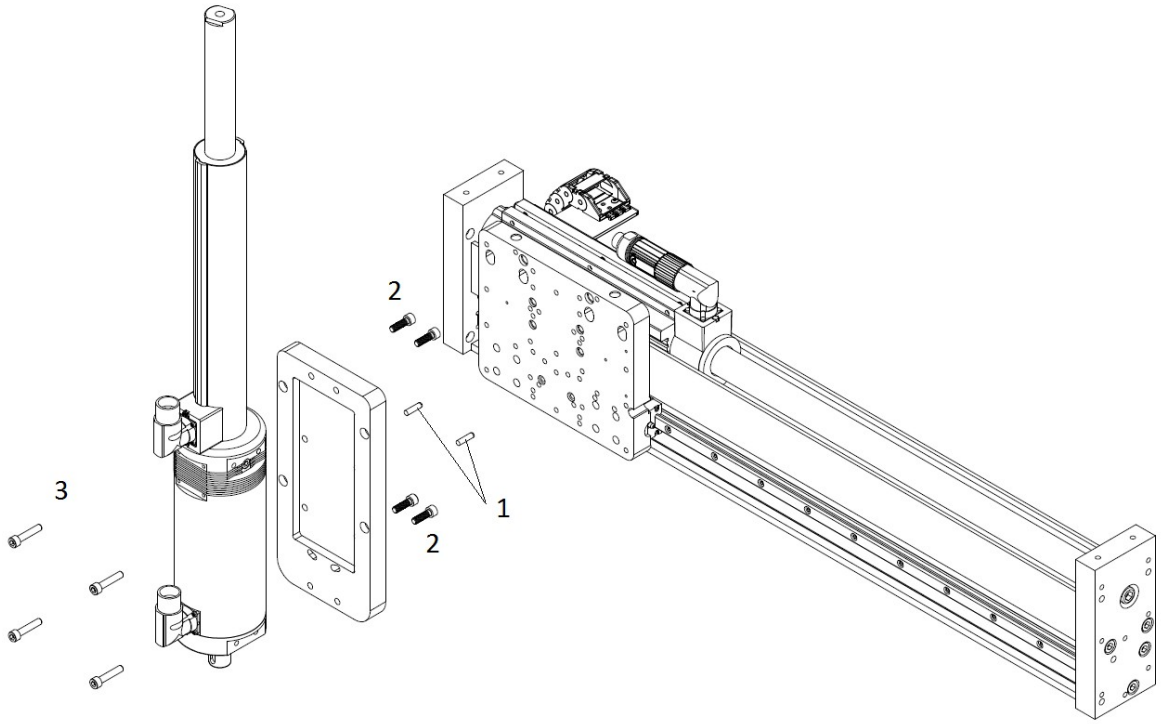

Mounting this part is done with the adapter plate **F01k-PR01-84 (Part-No. 0160-2594)**
NOTE: All the mounting parts are already included (1 - 3)
1. Pins 5x20 mm (2 pcs)
2. Screws M6x30 (4 pcs)
3. Screws M6x18 (4 pcs)

NOTE: Additional guide mounted to the top end of the load to prevent vibrations may be required. For more information see chapter Mounting „long“ Loads on the F-Guide.

PR01-84x80-C/48xXXF-C-100 (G0x)

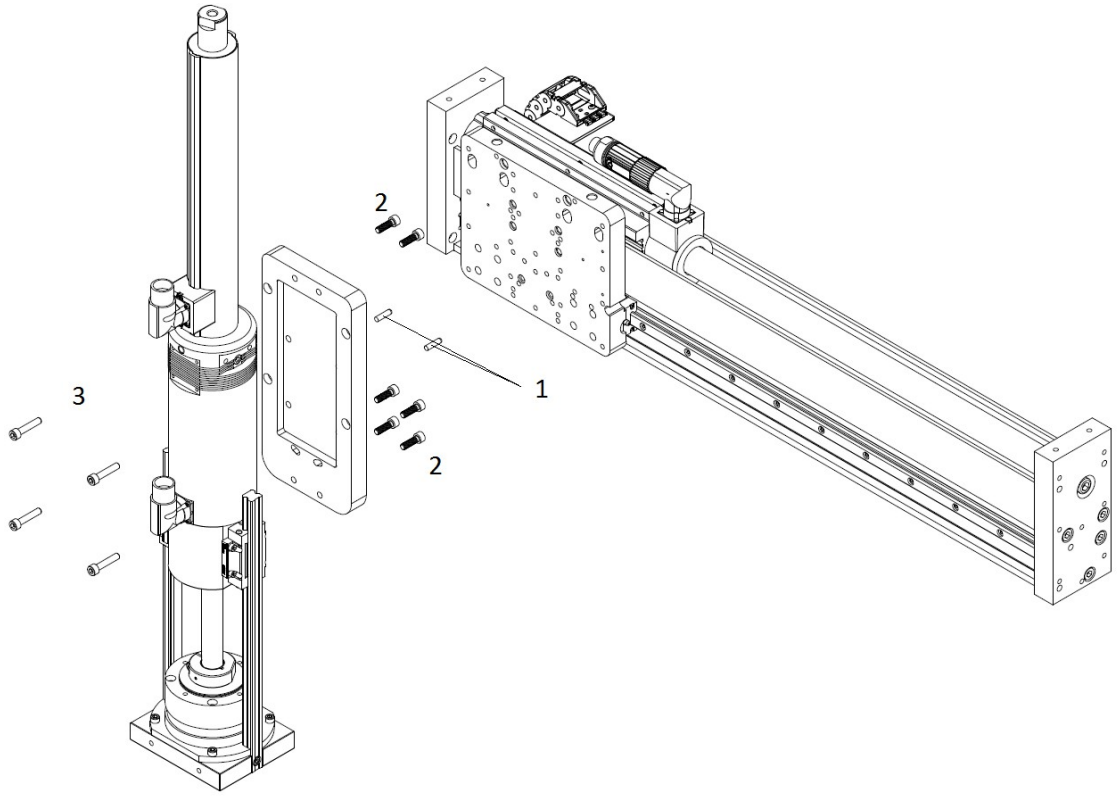

Mounting this part is done with the adapter plate **F01k-PR01-84 (Part-No. 0160-2594)**
NOTE: All the mounting parts are already included (1 - 3)
1. Pins 5x20 mm (2 pcs)
2. Screws M6x30 (6 pcs)
3. Screws M6x18 (4 pcs)

NOTE: Additional guide mounted to the top end of the load to prevent vibrations may be required. For more information see chapter Mounting „long“ Loads on the F-Guide.

Maintenance

Maintenance of Carriages

Relubrication of carriages

The lubrication intervals for profile rail guides depend primarily on the average running speed, operating temperature and grease quality. Where contamination, use of coolants, vibration, shock loads etc. form part of the environmental conditions, it is advisable to increase re-lubrication intervals accordingly.

The following re-lubrication intervals should be used until empirical values are available.

for velocities v < 1m/s
Constant main load < 0.30 C every 1200 km

(C = Load Capacity)

additional information about lifetime and maintenance.

Quantity of lubricant for carriages

Quantity of lubricant:= 0,4 cm^3

Lubricant for carriages

Lubricant: SKF LGEP 2

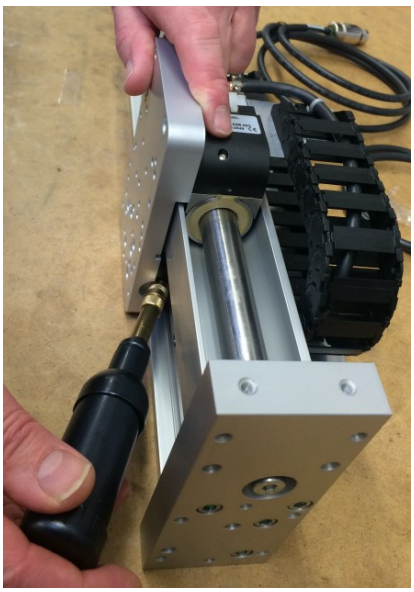

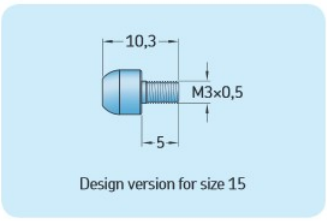

Figure: Relubrication with grease press. Grease nipple

Maintenance of LinMot Motors

LinMot Stators will be shipped with an initial lubrication. Maintenance will only be required if the motors run 'dry' or there is a heavy pollution of the motors.
Under normal industrial conditions (5 days, 8hr/day) one inspection every 3 months is adequate. Where conditions differ, as with severe and permanent fouling, direct sunshine, operation out in the open, increased operating temperature etc., the maintenance intervals must be shortened till empirical values for the particular application are obtained.

Assembling of the Motors

The sliders must be cleaned first. Sliders with a length of more than 500 mm (20 in) must be lubricated with LU02. Lubricate the slider with a soft fabric or manually. 4 g of lubricant per meter slider is enough to create a film of lubricant on the surface of the sliders. (4 g (0.14 oz) is about ½ of a hazelnut). Do not over lubricate! Especially in higher operating temperatures, over lubrication can lead to a gumming of the lubricant. (In such a situation the motor must be cleaned completely.)

Inspection

Inspections have to be executed according to the operating condition and the load of motors. Following points have to be checked during inspection:

- Is a film of lubricant on the slider?
- Is the lubricant not sticky?
- Can the slider be moved easily?

If the motors are heavily polluted respectively if no film of lubricant is on the slider, then stators and sliders must be cleaned and lubricated again.

Cleaning

Pull the sliders carefully out of the Stator: Attention: huge magnetic attraction! Use non magnetic material (e.g. wood) to cover close-by iron constructions. Clean slider completely with cleaning agent LU06. The stators should also be cleaned with a soft fabric and LU06 until all dirt is removed. After that lubricate the bore of the stators with about 2-3 g (=0.1 oz) Lubricant LU02. There should only be a slight film of lubricant. Do not over lubricate! Slider should be lubricated according to the chapter 'Assembling of the Motors'.

Lubricant

The lubricant reduces the friction between the chromium-nickel steel surface of the slider and the reinforced plastic plain bearing.

LinMot® LU02 Lubricant corresponds to KLÜBERSYNTH UH1 14-31 which was developed for the food processing industry.

Cleaning Agent

The following Cleaning Agent spray is recommended for LinMot Stators and Sliders:

LinMot*® Spray LU06-250 *(250ml)* *Art. No. 0150-2394

LinMot® LU06 Lubricant corresponds to KLÜBERSYNTH NH1 4—2 which was developed for the food processing industry.

Storage / transport

Sliders are to be stored and transported only in the plastic containers (with cardboard inlay) provided for this, or already fitted in *LinMot*® *motors* and secured.

Maximum storage temperature: 70 °C

Caution: Handling Instructions for Sliders

LinMot Slider



LinMot® Linear Motor sliders must be handled with care especially if not assembled within the stator! Damaging or warping of the slider can result in shortened life and/or failure of the motor. The slider is essentially a high-precision machine component consisting of neodymium magnets and plastic materials assembled in a thin steel tube. Do not use sliders who are already damaged on the surface (scratches, deformation, etc.). This can provide a further damage of the stator! Keep slider away from unshielded flame or heat. Temperature of more than 120°C will cause demagnetization.

Magnetism



LinMot® sliders contain neodymium magnets which may disturb or damage magnetic data carriers and delicate electronic equipment merely by coming close to them. Examples for such equipment are: television and computer monitors, credit cards and EC-cards, computers, floppy discs and other data storage medium, video tapes, mechanical watches, hearing devices and loudspeaker. Heart pacemakers can be disturbed by strong magnets. Keep a minimum distance of 1m.

Crushing



When handling sliders be aware that, due the strong magnetic attraction, serious injury from fingers being pinched between the slider and nearby steel parts is a very real possibility if caution is not exercised.

No modification of sliders provided to customers is allowed!



Do not modify the slider in any way. Any modification could destroy the included magnets and magnet dust can be generated. Magnet dust is flammable! NdFeB-Magnets are not made of steel. These magnets are sintered and therefore highly breakable.

Drawings F01-37S

Stroke Range F01-37S guide

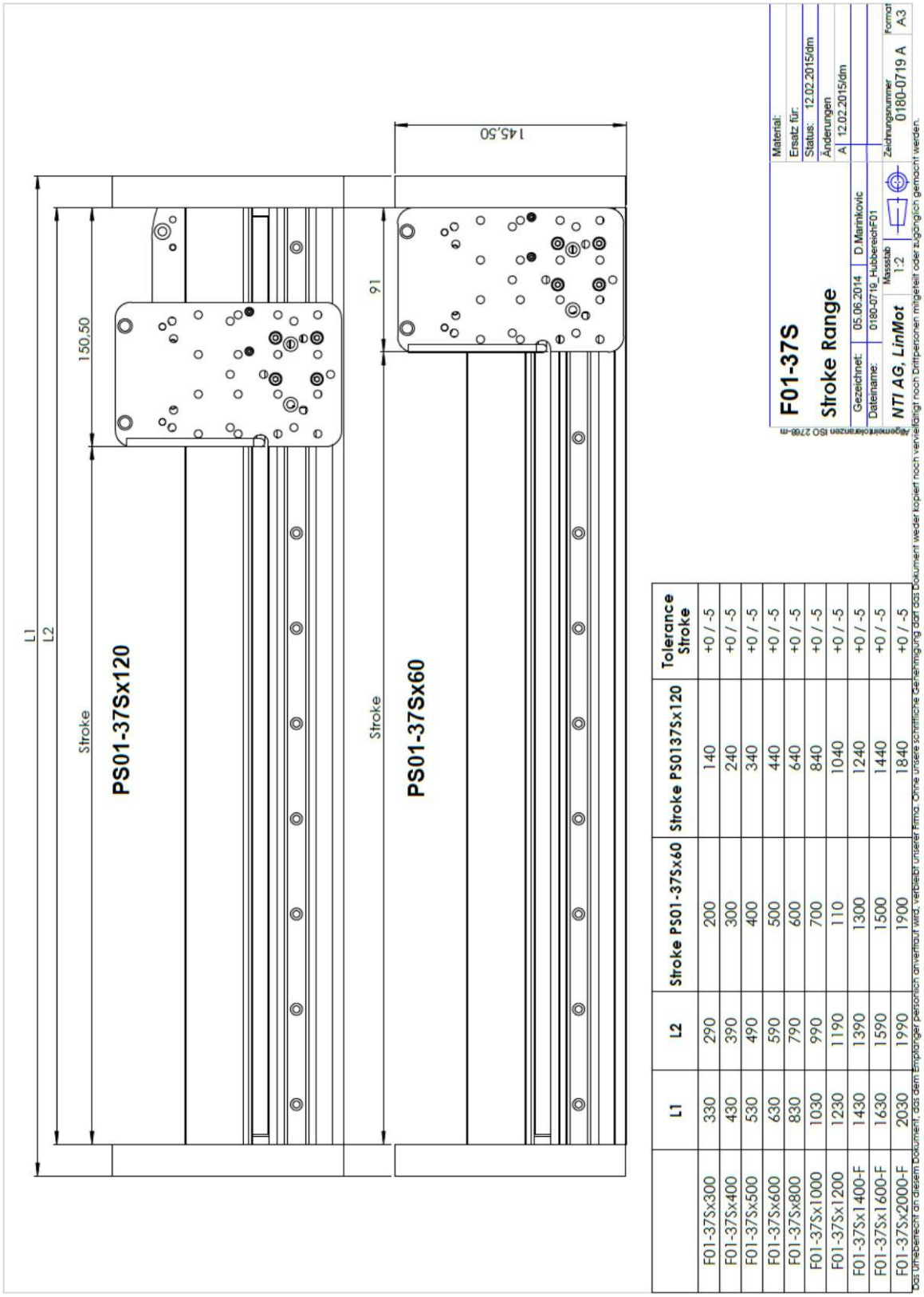

	L1	L2	Stroke PS01-37Sx60	Stroke PS0137Sx120	Tolerance Stroke
F01-37Sx300	330	290	200	140	+0 / -5
F01-37Sx400	430	390	300	240	+0 / -5
F01-37Sx500	530	490	400	340	+0 / -5
F01-37Sx600	630	590	500	440	+0 / -5
F01-37Sx800	830	790	600	640	+0 / -5
F01-37Sx1000	1030	990	700	840	+0 / -5
F01-37Sx1200	1230	1190	110	1040	+0 / -5
F01-37Sx1400-F	1430	1390	1300	1240	+0 / -5
F01-37Sx1600-F	1630	1590	1500	1440	+0 / -5
F01-37Sx2000-F	2030	1990	1900	1840	+0 / -5

Dimensions F01-37S guide

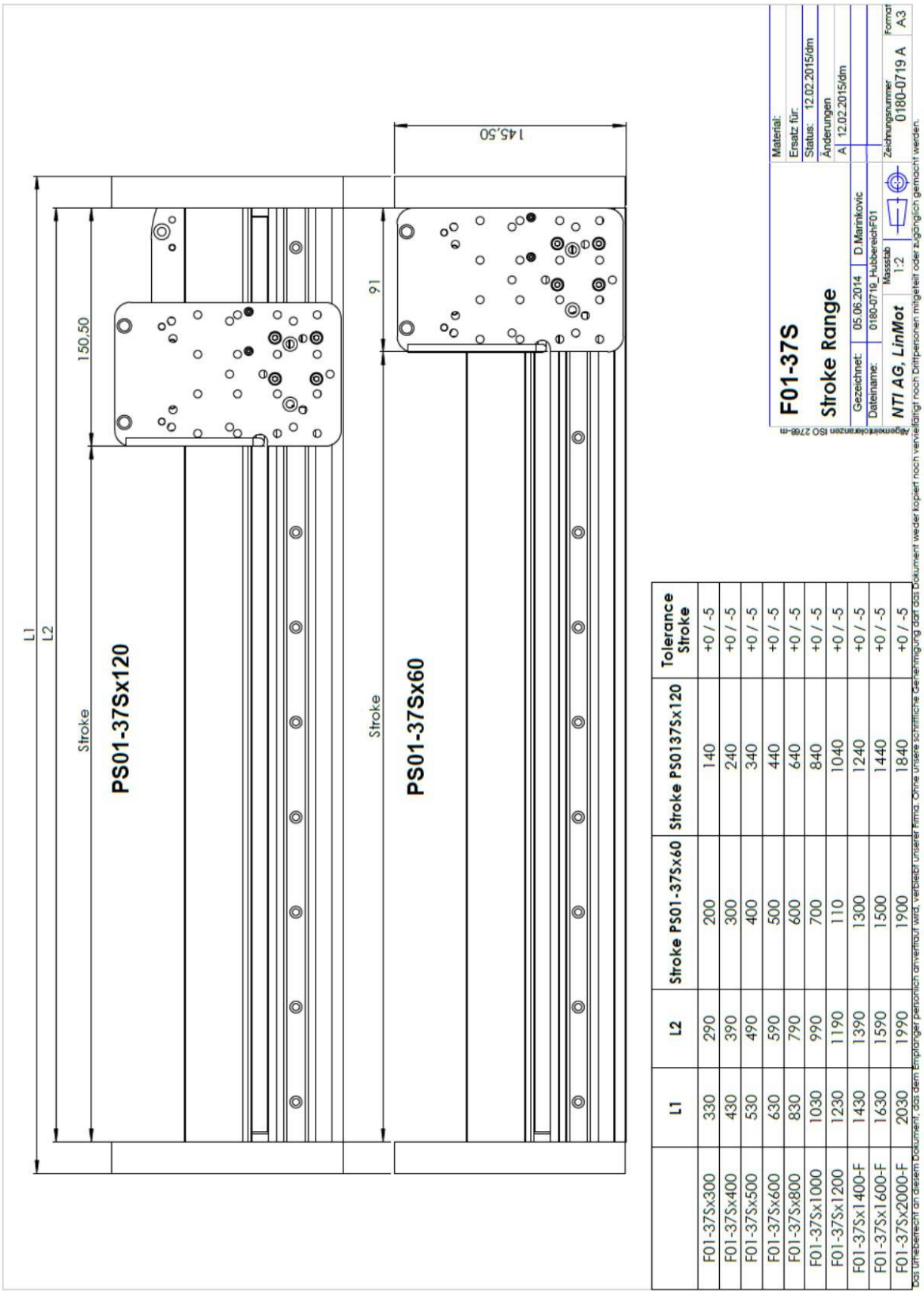

	L1	L2	Stroke PS01-37Sx60	Stroke PS0137Sx120	Tolerance Stroke
F01-37Sx300	330	290	200	140	+0 / -5
F01-37Sx400	430	390	300	240	+0 / -5
F01-37Sx500	530	490	400	340	+0 / -5
F01-37Sx600	630	590	500	440	+0 / -5
F01-37Sx800	830	790	600	640	+0 / -5
F01-37Sx1000	1030	990	700	840	+0 / -5
F01-37Sx1200	1230	1190	110	1040	+0 / -5
F01-37Sx1400-F	1430	1390	1300	1240	+0 / -5
F01-37Sx1600-F	1630	1590	1500	1440	+0 / -5
F01-37Sx2000-F	2030	1990	1900	1840	+0 / -5

Dimensions F01-37S-AP ground plate

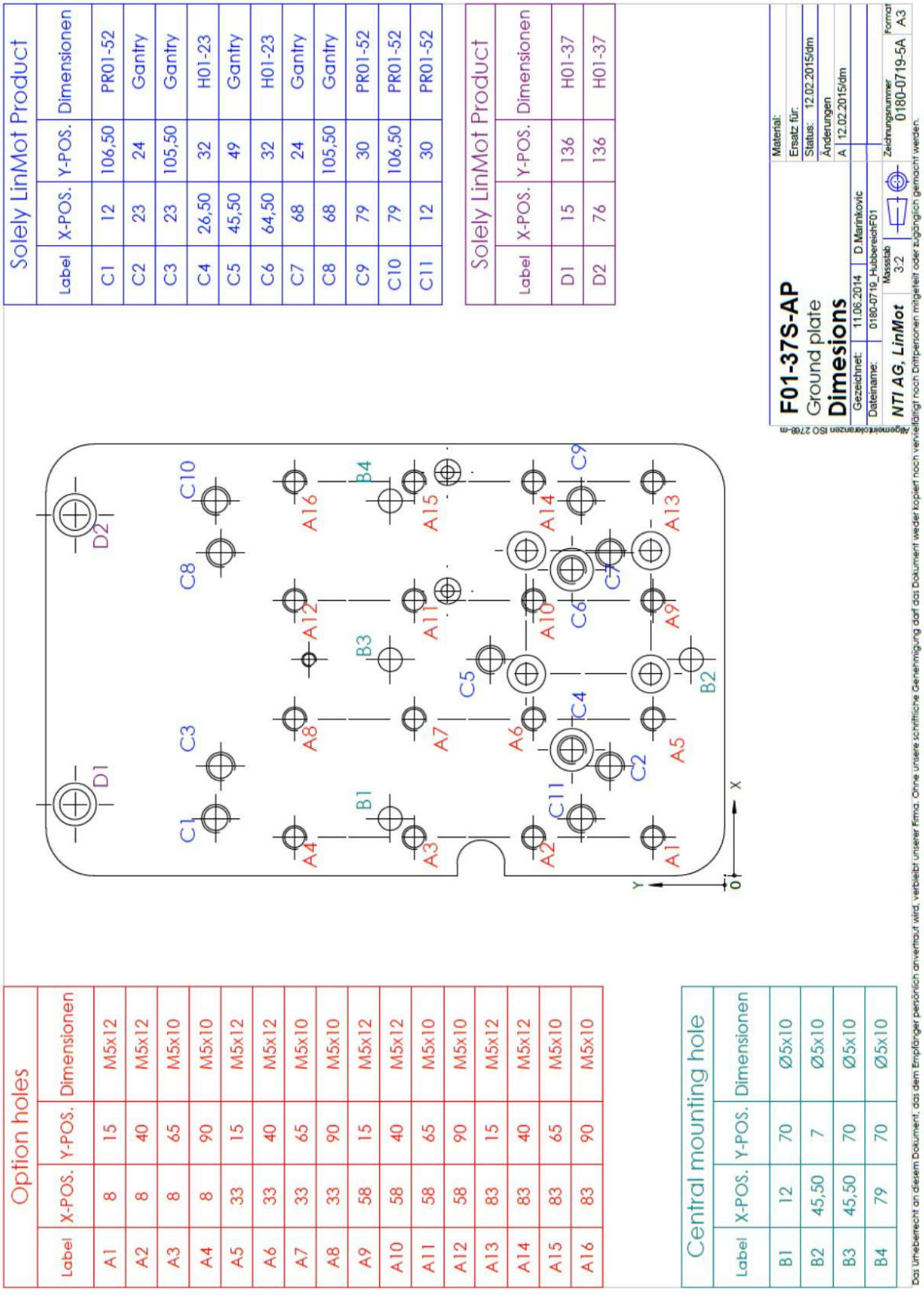

Dimensions F01-37S end plates

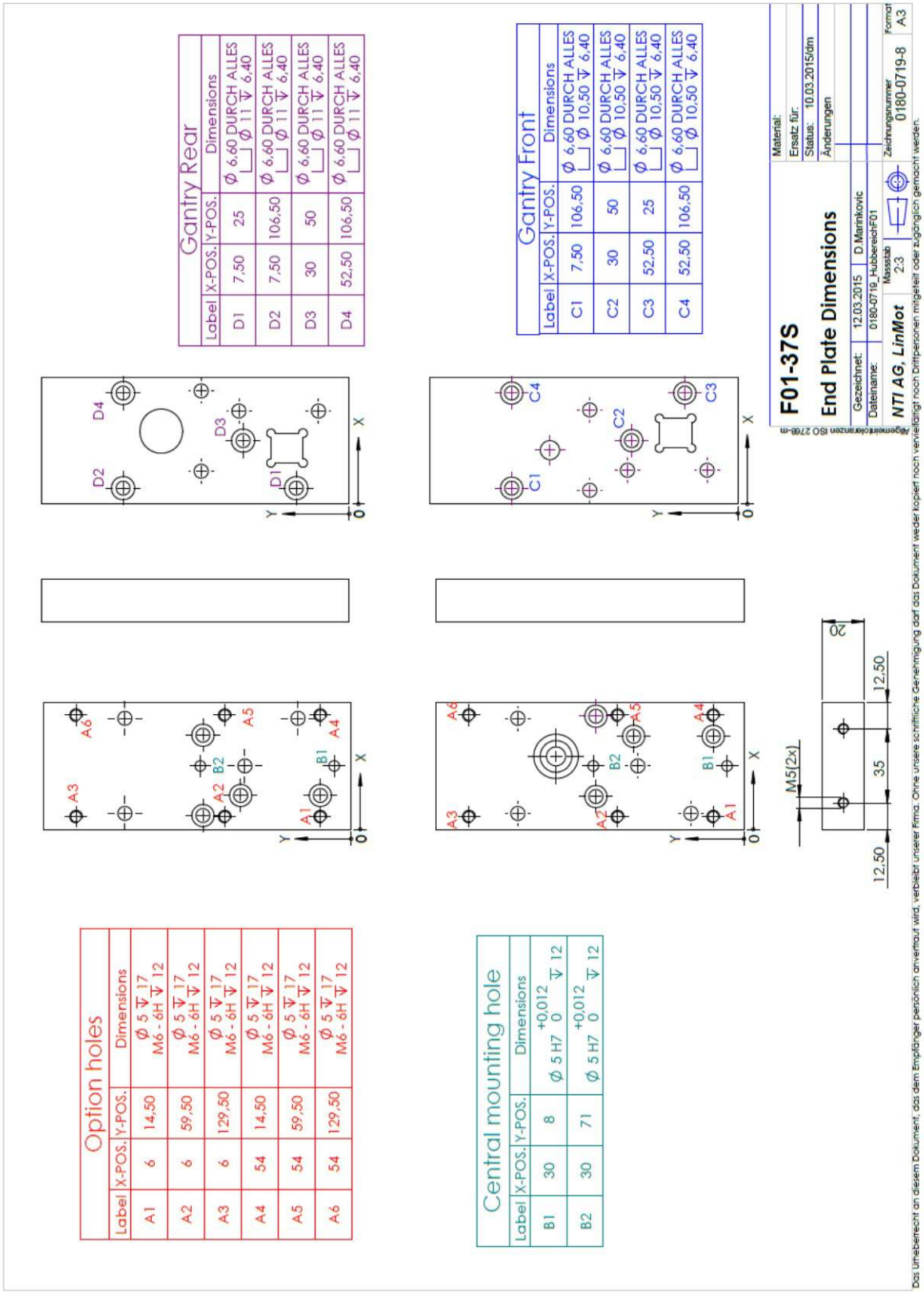

Dimensions F01-37S T-slots

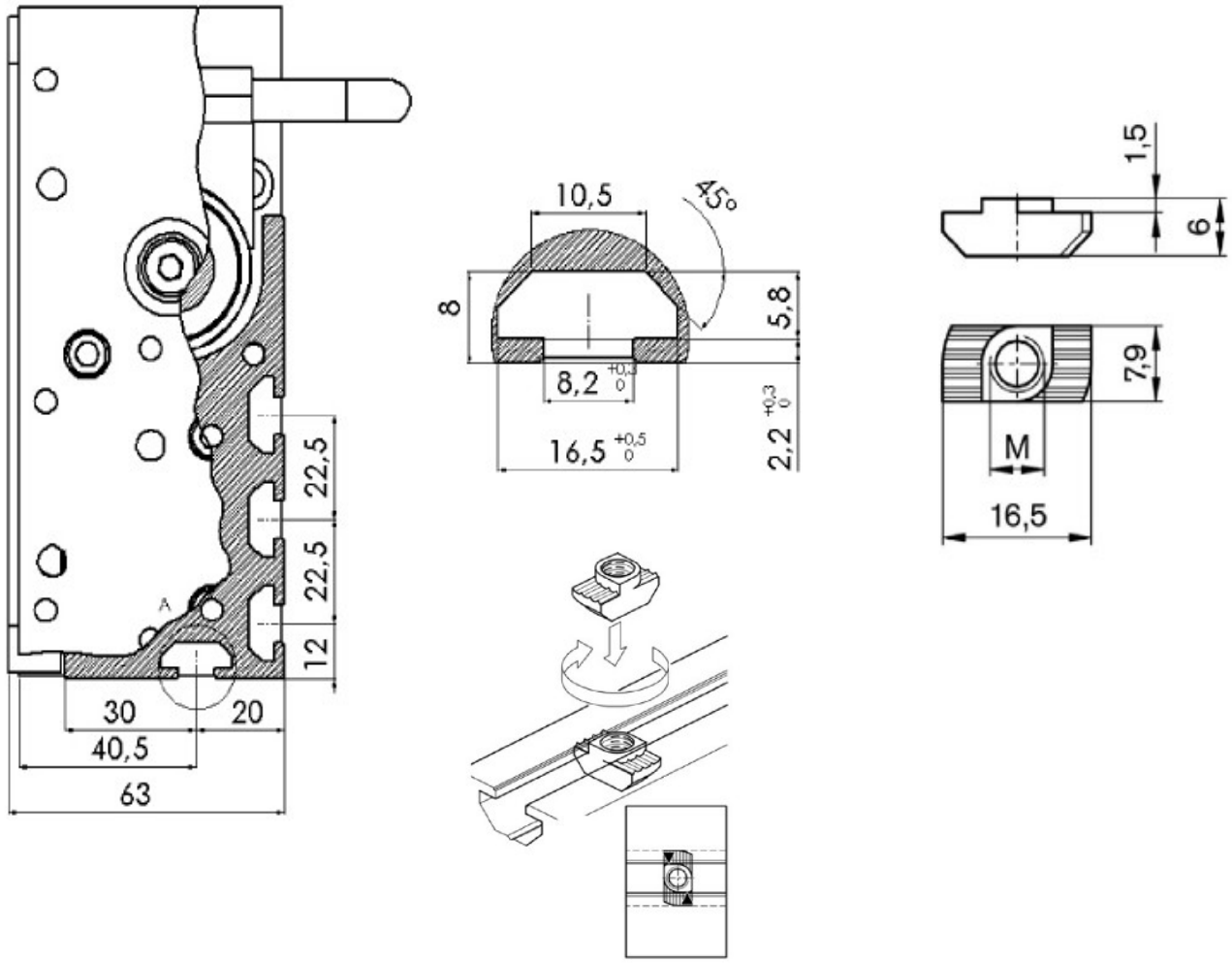

Description	Part-No	
Nut N8 / M4	0150-2189	Nut for 8 mm slots of F01-37S guides with M4 thread
Nut N8 / M6	0150-2558	Nut for 8 mm slots of F01-37S guides with M6 thread

Dimensions with H01-23x86 guide

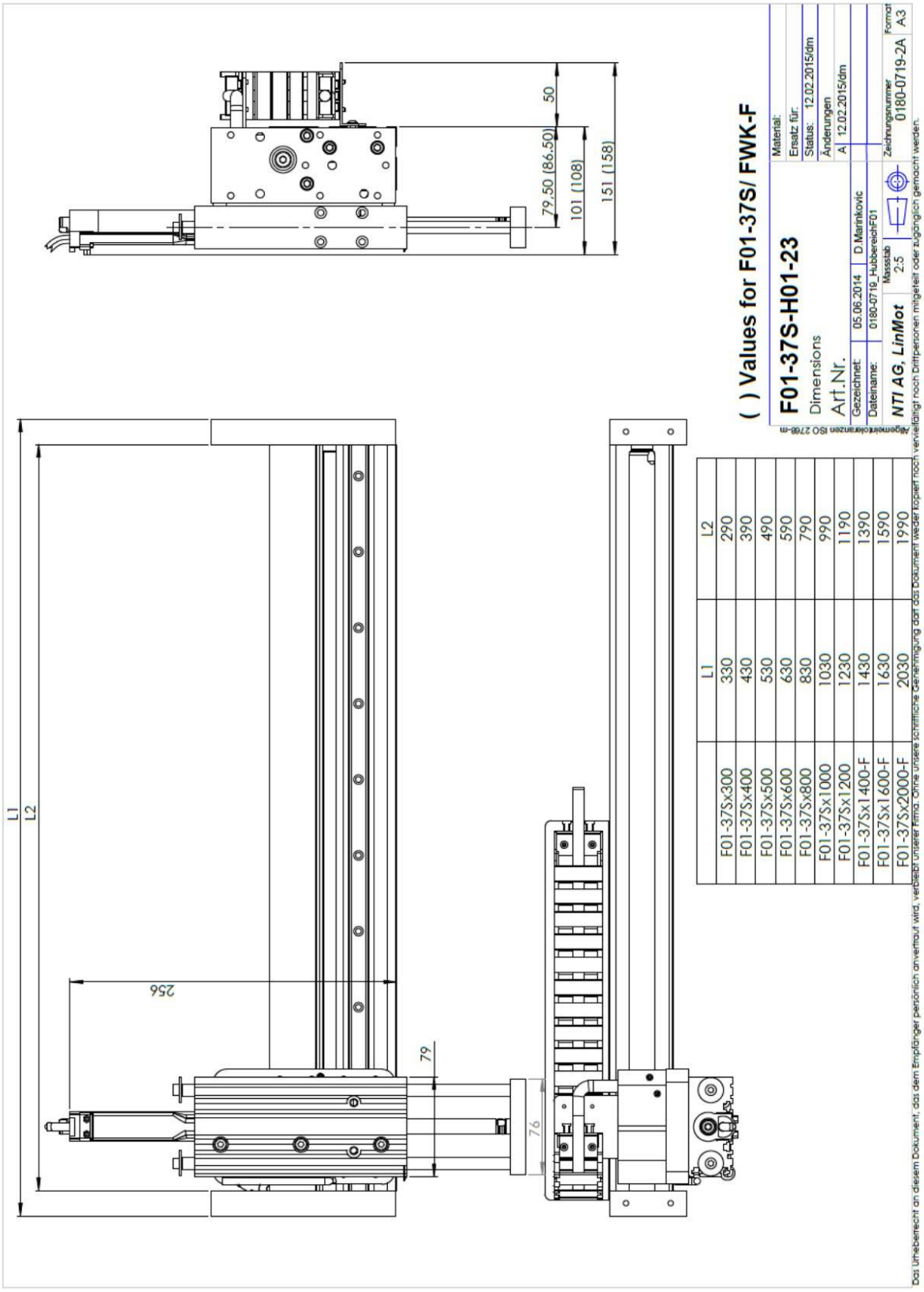

Dimensions with H01-37x166 guide

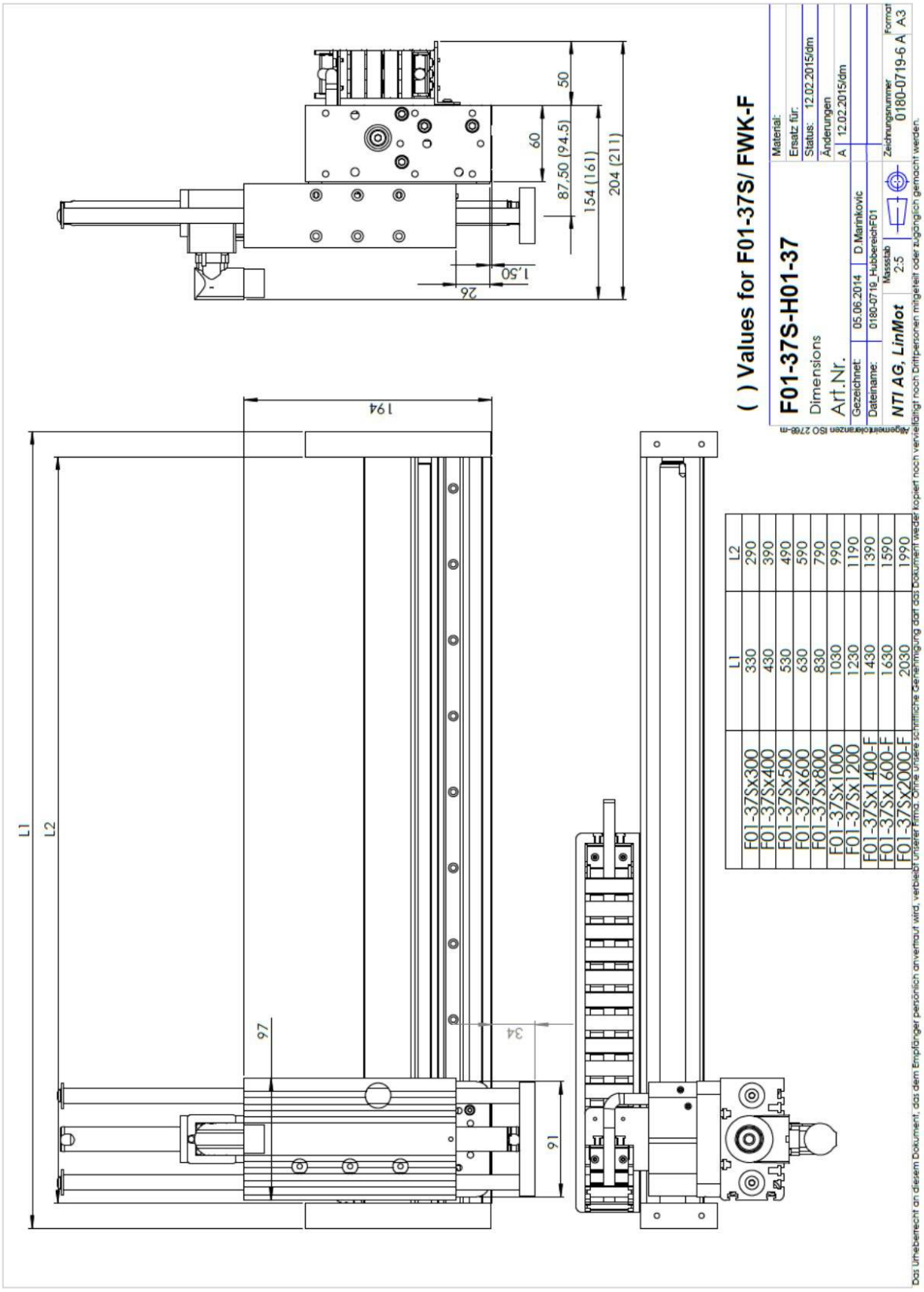

Dimensions with PR01-52x40-R/37x120F-HP-C-80/-L

***NOTE:** Long “load” on F-Guide mounting restrictions. For more information see page 33

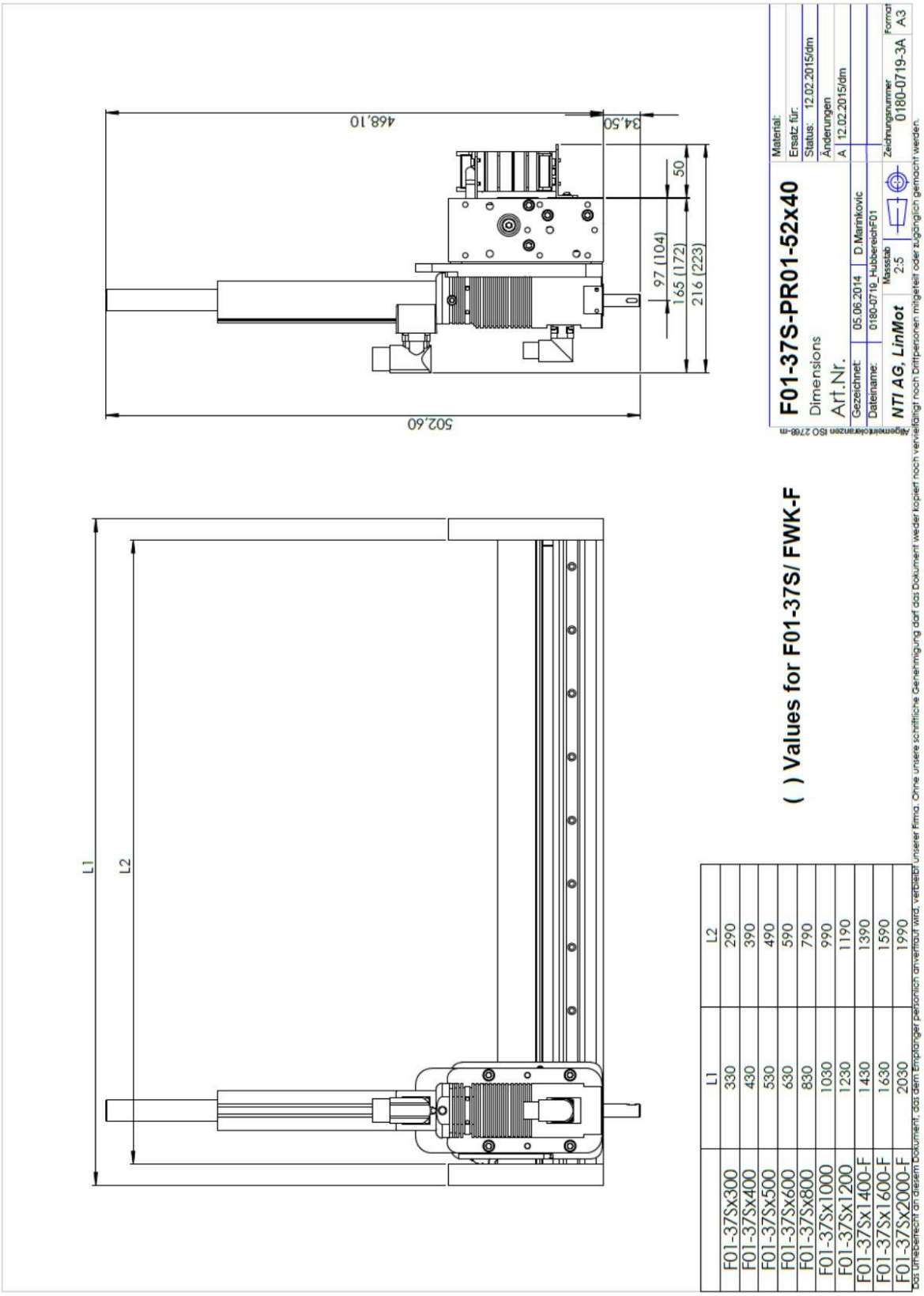

	L1	L2
F01-37Sx300	330	290
F01-37Sx400	430	390
F01-37Sx500	530	490
F01-37Sx600	630	590
F01-37Sx800	830	790
F01-37Sx1000	1030	990
F01-37Sx1200	1230	1190
F01-37Sx1400-F	1430	1390
F01-37Sx1600-F	1630	1590
F01-37Sx2000-F	2030	1990

Dimensions with PR01-52x60-R/37x120F-HP-C-100/-L

***NOTE:** Long “load” on F-Guide mounting restrictions. For more information see page 33

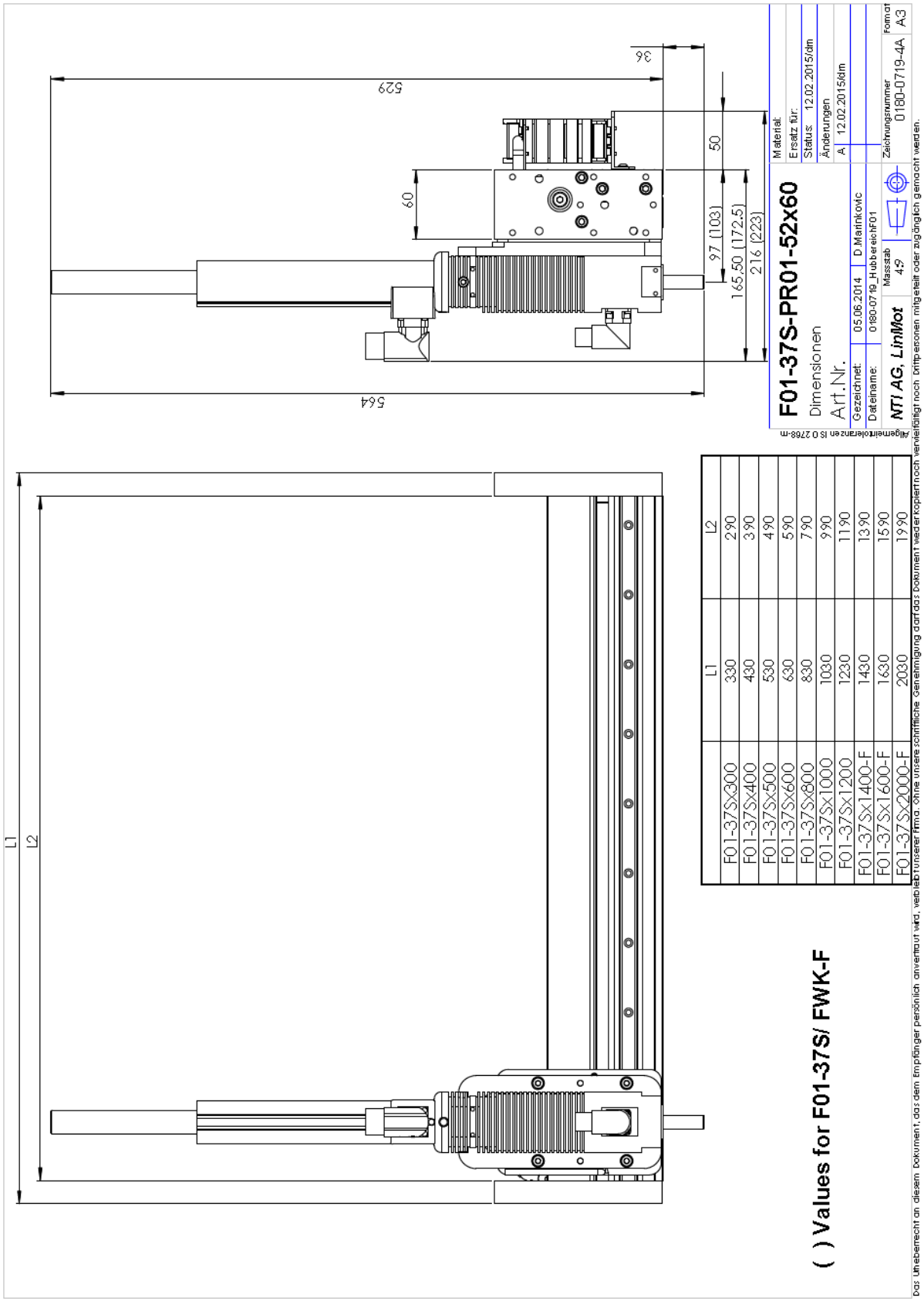

Dimensions with PR01-52x60-R/37x120F-HP-C-100-G

***NOTE:** Long “load” on F-Guide mounting restrictions. For more information see page 33

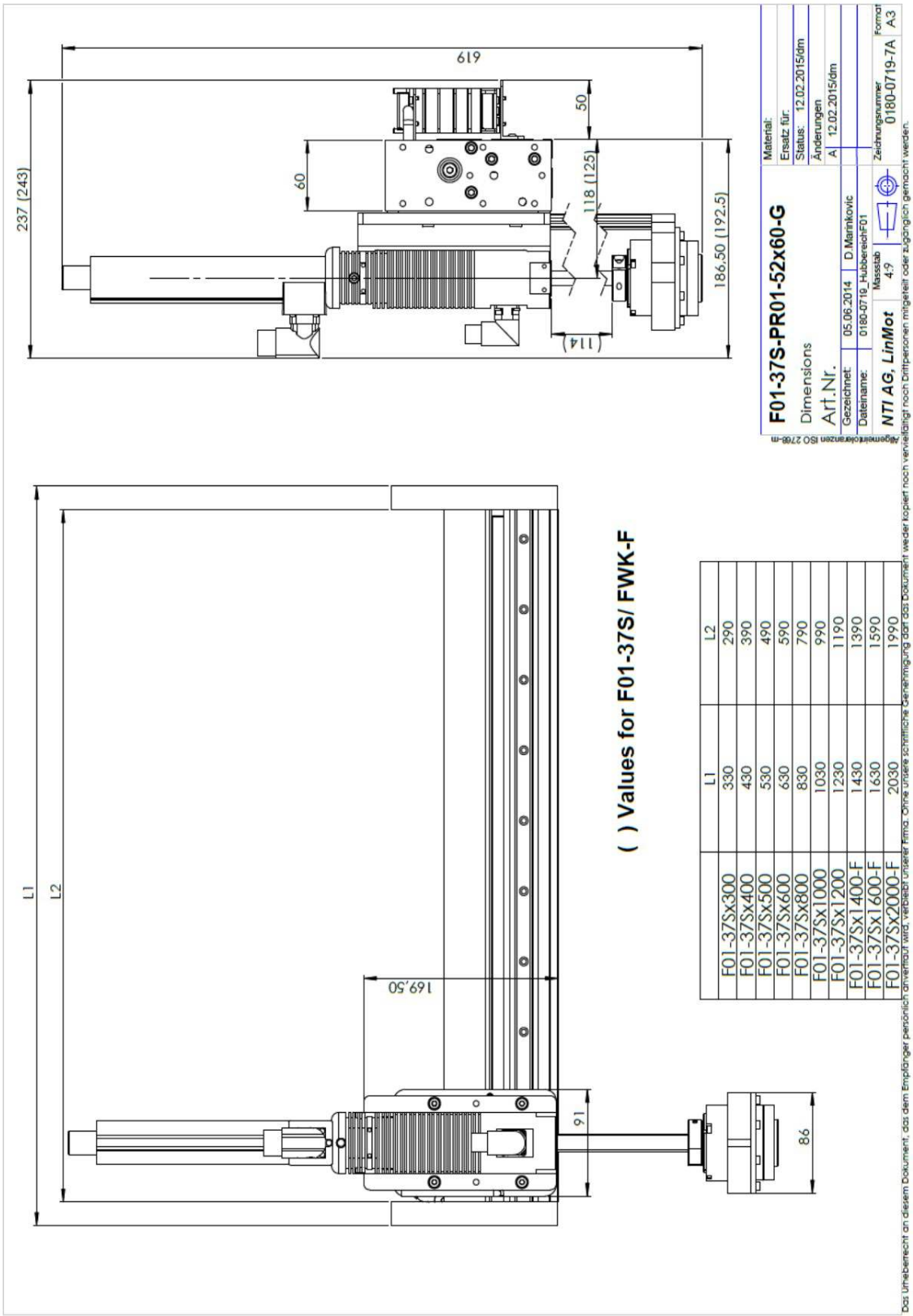

Drawings F01-48

Stroke Range F01-48 guide

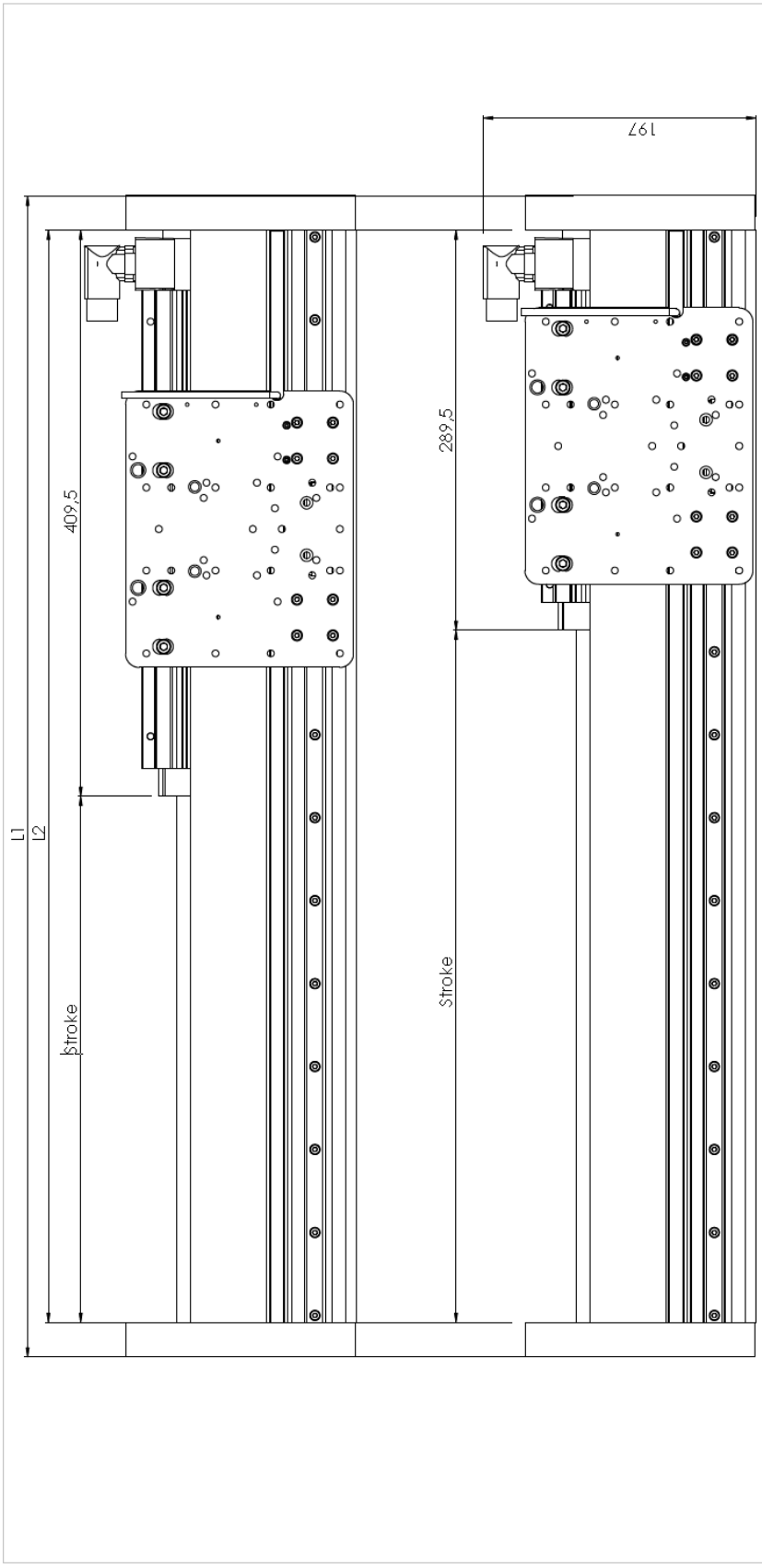

	L1	L2	Stroke PS01-48x240F-C	Stroke PS01-48x360F-C
F01-48x500	540	490	200,5	80,5
F01-48x620	660	610	320,5	200,5
F01-48x800	840	790	500,5	380,5
F01-48x1010	1050	1000	710,5	590,5
F01-48x1220	1260	1210	920,5	800,5
F01-48x1400	1440	1390	1100,5	980,5
F01-48x1610	1650	1600	1310,5	1190,5
F01-48x1820	1860	1810	1520,5	1400,5
F01-48x2000	2040	1990	1700,5	1580,5
F01-48x2210	2250	2250	1960,5	-
F01-48x2450	2490	2440	2150,5	-

Allgemeintoleranzen ISO 2768-m

F01-48
Stroke Range

Gezeichnet:	05.06.2015	D.Marinkovic	
Dateiname:	0185-0188-Hubbereich_F01-48		
NTI AG, LinMot	Massstab 1:2		Zeichnungsnummer 0180-0788

Material:
Ersatz für:
Status: 05.06.2015/dm
Änderungen

Format A2

Das Urheberrecht an diesem Dokument, das dem Empfänger persönlich anvertraut wird, verbleibt unserer Firma. Ohne unsere schriftliche Genehmigung darf das Dokument weder kopiert noch vervielfältigt noch Dritt personen mitgeteilt oder zugänglich gemacht werden.

Dimensions F01-48 guide

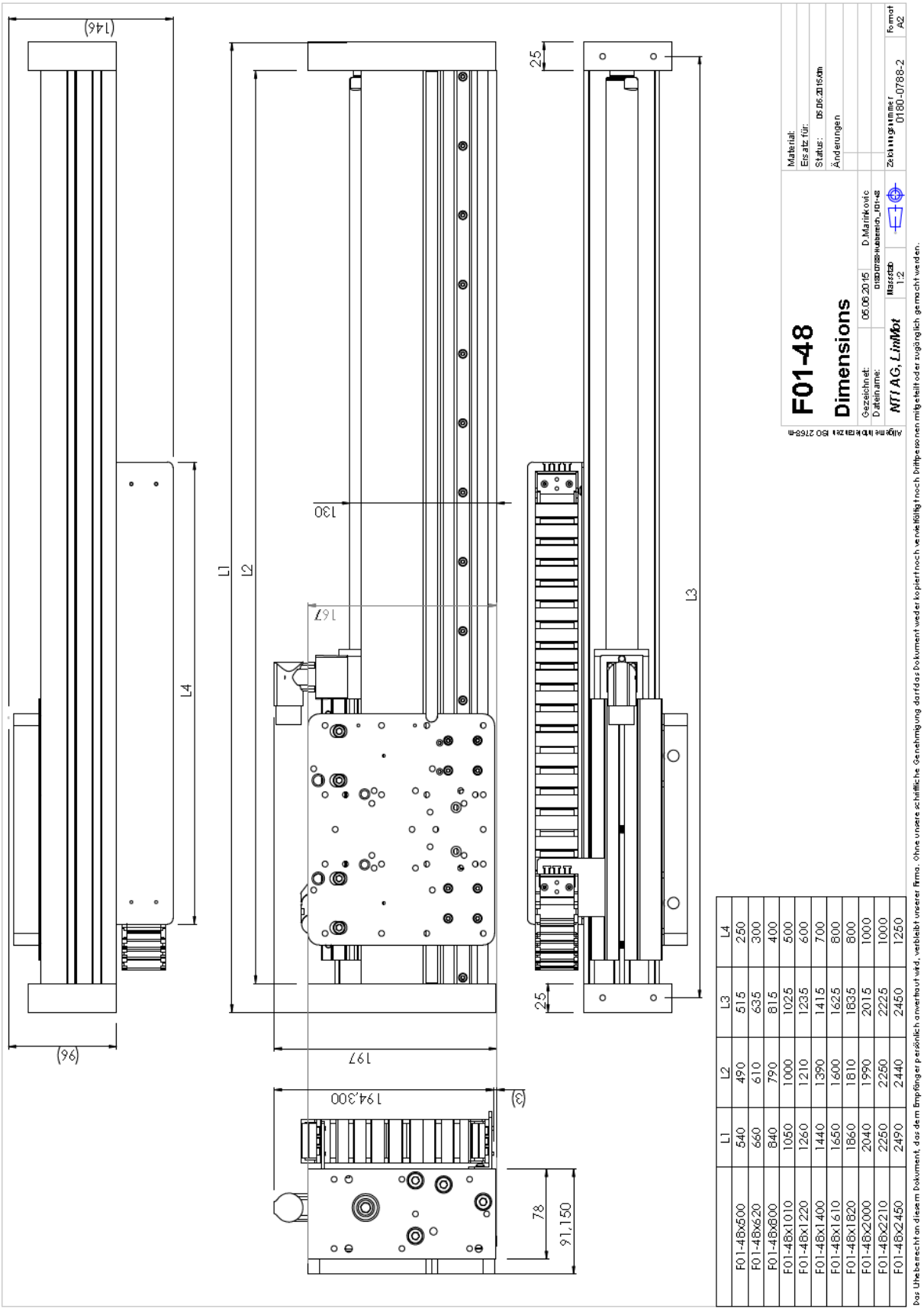

	L1	L2	L3	L4
F01-48x500	540	490	515	250
F01-48x620	660	610	635	300
F01-48x800	840	790	815	400
F01-48x1010	1050	1000	1025	500
F01-48x1220	1260	1210	1235	600
F01-48x1400	1440	1390	1415	700
F01-48x1610	1650	1600	1625	800
F01-48x1820	1860	1810	1835	800
F01-48x2000	2040	1990	2015	1000
F01-48x2210	2250	2250	2225	1000
F01-48x2450	2490	2440	2450	1250

Dimensions F01-48 ground plate

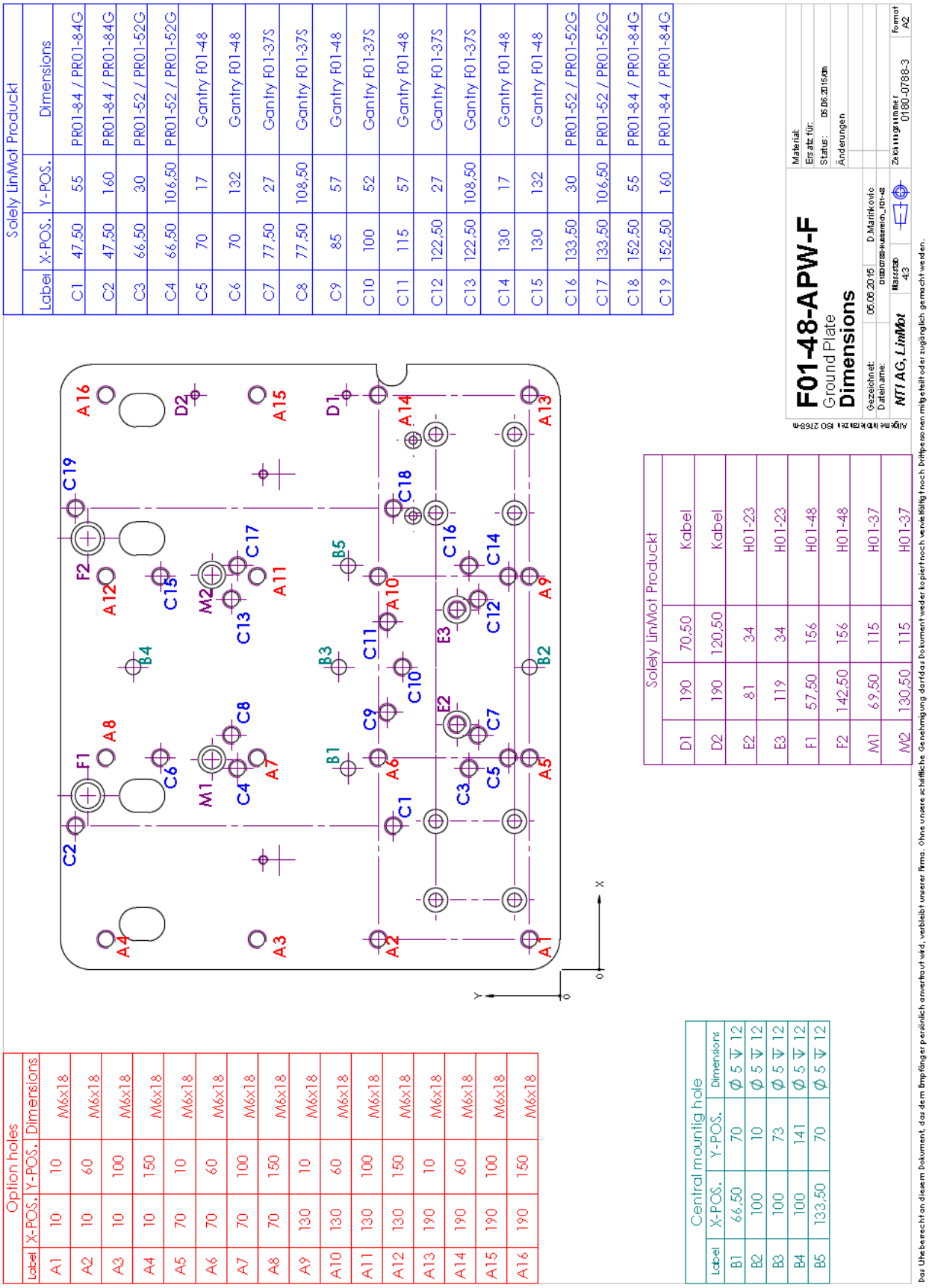

Dimensions F01-48 end plate

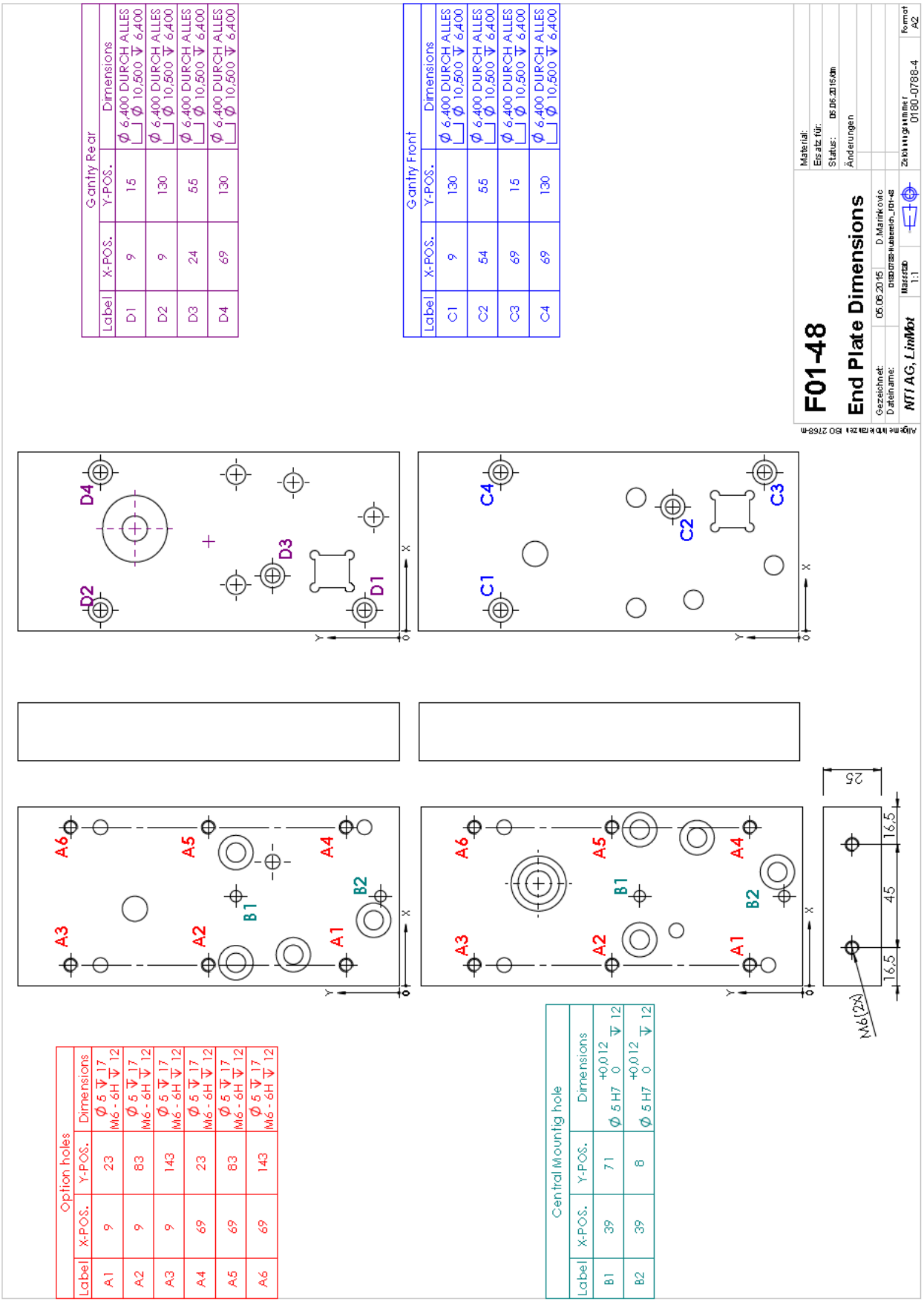

Das Urheberrecht an diesem Dokument, das dem Empfänger persönlich anvertraut wird, verbleibt unserer Firma. Ohne unsere schriftliche Genehmigung darf das Dokument weder kopiert noch vervielfältigt noch Dritte Personen mitgeteilt oder zugänglich gemacht werden.

Declaration of Conformity CE-Marking

We **NTI AG**
LinMot ®
Bodenaeckerstrasse 2
CH-8957, Spreitenbach

declare under our sole responsibility that the products

Products	Art.-No.
PS01-37Sx60-HP-N-AGI	0150-2549
PS01-37Sx120F-HP-N-AGI	0150-2550
PS01-48x240F-C	0150-1220
PS01-48x240F-HP-C	0150-2991
PS01-48x360F-C	0150-1269

Is conform to the provisions of directives

2014/30/EU (EMCD)

based on the following standards

EN61800-3

Spreitenbach, 19. 4. 2016



Dr.-Ing. Ronald Rohner
CEO NTI AG

Contact address:

Liability
NTI AG / LinMot (LinMot) is not responsible for any damages caused by improper use, application, or handling of LinMot manufactured or supplied materials and is not responsible for any consequential damages of any sort relating to the use of LinMot products.
LinMot's warranty is limited to repair or replacement as stated in our standard warranty policy as described in our "terms and conditions" previously supplied to the purchaser of our equipment (please request copy of same if not otherwise available). Product warranties are void if LinMot products are used with stators, sliders, or controllers not manufactured by LinMot unless such use was specifically approved by LinMot.

A copy of this notice must be attached to each motor and/or machine that the purchaser provides to others.

LinMot®, LinRot® and MagSpring® are registered trademarks of NTI AG

Specification of products are subject to change without notification