NOVA
Dual-Axis Servo Drive

COTS Motion Control for Low Earth Orbit (LEO) Applications



The Nova servo drive is a COTS designed product specifically for Low Earth Orbit (LEO) motion control applications.

This extremely small, lightweight, dual-axis controller is one of the few COTS servo drives for high performance space applications (operating in vacuum and high vibration environments) on the market today!

A radiation tolerant version is available. The safety-critical Nova is based on DO-178C baselined software, which can be tailored to your requirements. Nova is equipped with EMI & inrush protection, brake drivers, and is packaged in a ruggedized case.

Features:

- Radiation tolerant (Optional)
- Lightweight and efficient
- Dual-axis configuration
- The Nova uses sinusoidal (sine) drive technology for the best efficiency while minimizing torque ripple.
- Sealed; shock- and vibration-tolerant construction
- Torque, velocity, or position control
- Includes configurable, user-friendly GUI with enhanced data collection capability and integrated oscilloscope feature.
- Motor types: DC Brushless
- Brake drivers
- EMI, ESD and inrush protection
- Feedback: resolver
- Rugged circular connectors (outgassed option for space applications)

Specifications:

- Single Power Input / Bus Voltage: 28VDC
- Nominal input current up to 5A/axis (transient: 10A)
- Output Power: 100W (per axis)
- Efficiency >95% (full load)
- Operating Temperature: - 40°C to 71°C
- Flight Unit Weight: 1.01 lbs.
- Flight Unit Size: 4.0" L x 3.5" W x 1.9" H

Compliance (Flight Units):

- Software Design Assurance: DO-178C Option
- IPC-610 Class III High-Performance Assembly
- Electromagnetic Interference per MIL-STD-461:
  - CE102
  - CS101
  - CS114
  - CS115
  - CS116
  - RE101
  - RE102
  - RS103
- Environmental qualification per MIL-STD-810:
  - Random Vibration (X, Y & Z axes): 22.4 Grms, 20 – 2,000 Hz (0.40 g^2/Hz)
  - SRS Shock (X, Y & Z axes): 60 to 600 G's, 100 – 750 Hz. 600 G's, 750 – 10,000 Hz.
- Electrical power characteristics: MIL-STD-704F

Customization Available

ESI Motion has the expertise to customize a solution for your project's needs – contact us to see how we can tailor a solution for you.

This document does not contain Technical Data or Technology as defined the ITAR Part 120.10 or EAR Part 772.

© 2020 ESI Motion – ESI Proprietary

Typical Nova Application:

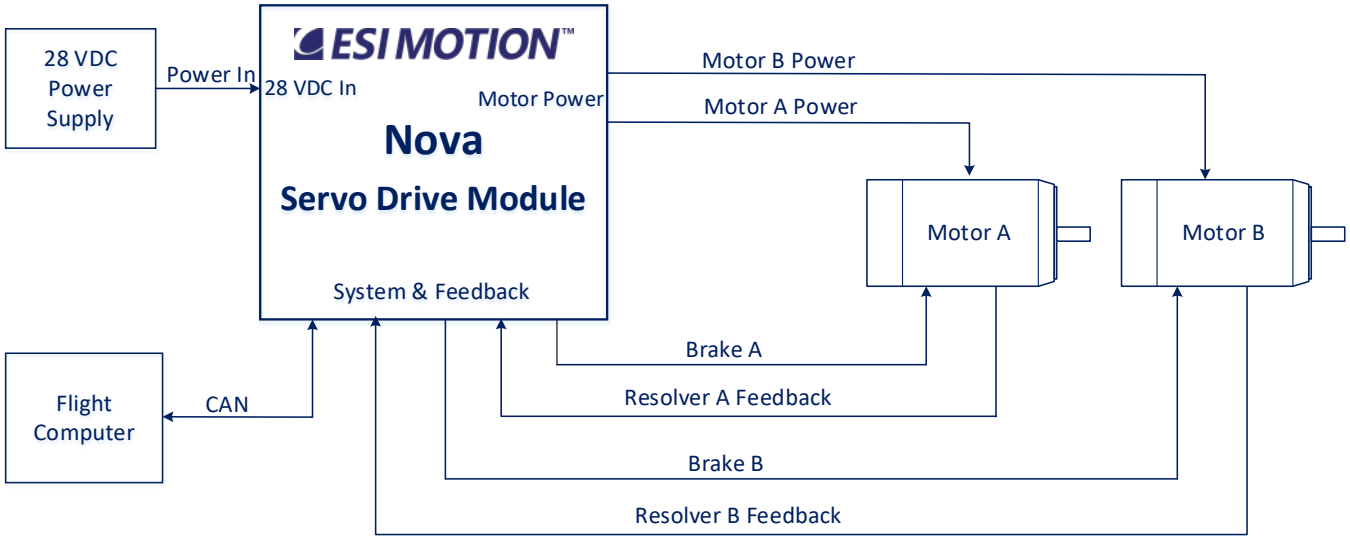

Nova Block Diagram:

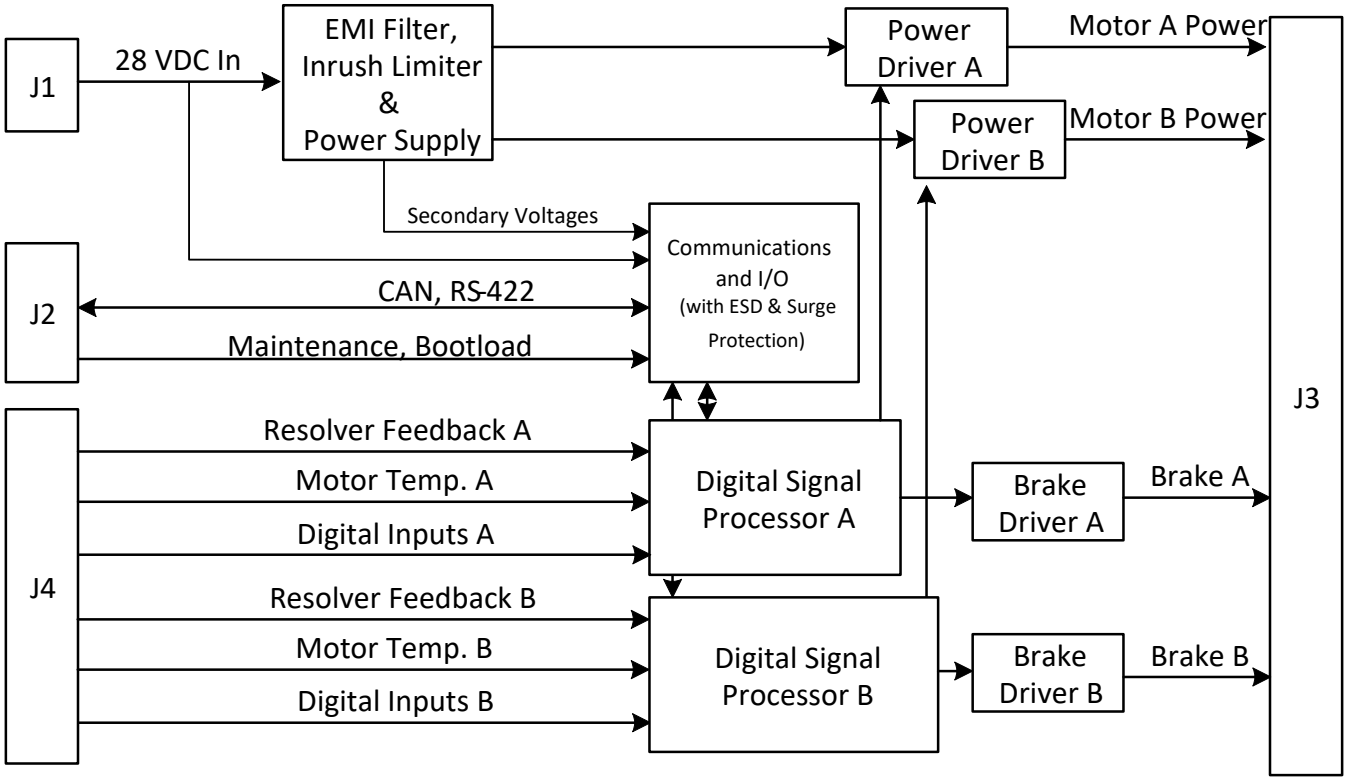

This document does not contain Technical Data or Technology as defined the ITAR Part 120.10 or EAR Part 772.
© 2020 ESI Motion – ESI Proprietary

ELECTRICAL SPECIFICATIONS

Absolute Maximum Values

The values in the table below should never be exceeded, as permanent damage to the controller may result.

PARAMETER	MAX	UNIT
Power Input / Bus Voltage (V_{BUS})	50	VDC
Resolver Inputs	+/-22	V
Motor Temperature Sensor Inputs	+2	V
Operating Case Temperature	-40 to +71	°C
Storage Temperature	-55 to +100	°C

Recommended Operating Conditions

DC INPUT CHARACTERISTICS				
PARAMETER	**MIN**	**NOM**	**MAX**	**UNIT**
Power Input / Bus Voltage (V_{BUS}) (1)	22	28	29	VDC
Continuous Input Current			10	A

Notes:

1. Compliant to MIL-STD-704F, input transient voltages between 18VDC and 50 VDC are tolerated.

OUTPUT CHARACTERISTICS			
PARAMETER (PER AXIS)	**MIN**	**MAX**	**UNIT**
Continuous Output Current (2)		5	A
Transient Output Current (2) (3)		10	A
Continuous Output Power (4)		140	W

Notes:

2. Peak Sine Wave.
3. Transient Output Current Duration: 2 Seconds
4. Output Power may be limited by the maximum input current at low input voltages.

This document does not contain Technical Data or Technology as defined the ITAR Part 120.10 or EAR Part 772.

© 2020 ESI Motion – ESI Proprietary

Recommended Operating Conditions, cont.

I/O CHARACTERISTICS					
PARAMETER		**MIN**	**NOM**	**MAX**	**UNIT**
Motor Temperature RTD Resistance at 0°C (1) (2)			1		KΩ
Resolver Excitation Output (1)			2		V_{RMS}
Resolver Excitation Output Frequency (3)			10		kHz
Resolver SIN, COS Input Differential Range (1)			1		V_{RMS}
Resolver SIN, COS Input Current		-20		+20	mA
Digital Differential Inputs (1) (Switch Closure: Short or Open)	Short			1	Ω
	Open	1			MΩ
CAN (1) (4) (5)				1,000	Kbps
RS-422 (1) (5) (6)				1,000	Kbps

Notes:

1. ESD protected
2. Recommended Resistance Temperature Detector (RTD): IEC 60751 Class B, 1KΩ (Contact ESI Motion for alternate devices)
3. Default resolver frequency is 10 kHz. (Contact ESI Motion for custom frequencies.)
4. Compliant to ISO 11898-2 specification.
5. Short circuit protection from -7 V to +12 V
6. Compliant to ANSI/TIA/EIA-422 (Note: for DO-178C product: CAN is standard; for RS-422, contact ESI Motion)

Thermal

Maximum Case Temperature

The maximum operating case temperature is +71°C.

Thermal Conductivity Data

The Nova Servo Drive thermal resistance was measured from component junction to the heat sink base plate. Refer to Thermal Resistance Table below.

Symbol	Description	°C/W
Tjb	Theta Junction to Base Plate	4.03

Thermal Resistance

This document does not contain Technical Data or Technology as defined the ITAR Part 120.10 or EAR Part 772.

Mechanical & Connectors

MECHANICAL CHARACTERISTICS		
PARAMETER	**VALUE**	**UNIT**
Weight, Flight Unit	1.01	lbs.
Size, Flight Unit	4.0" L x 3.5" W x 1.9" H	inches
Weight, Prototype	1.3	lbs.
Size, Prototype	5.7" L x 3.2" W x 2.0" H	inches
Maximum Case Temperature (1)	+71	°C

Notes:

1. Based upon NASA Goddard Space Flight Center's: GSFC-EEE-INST-002 -- Instructions for Electrical, Electronic and Electromechanical (EEE) Parts Selection, Screening, Qualification, and Derating.

CONNECTORS							
No.	**FUNCTION**	**INSERT ARRANGE-MENT**	**CLOCKING**	**#, TYPE CONTACTS**	**CONTACTS SIZE**	**NOVA CONNECTOR (CONTACTS) (1)**	**MATING CONNECTOR (CONTACTS) (2)**
J1	Input Power	10-2	"A" (Normal)	2 pins	16	Amphenol Micro38999: 2M805-005-02M10-2PA (pins)	Amphenol Micro38999: 2M805-001-16M10-2SA (sockets)
J2	Communication	10-13	"A" (Normal)	13 pins	23	Amphenol Micro38999: 2M805-005-02M10-13PA (pins)	Amphenol Micro38999: 2M805-001-16M10-13SA (sockets)
J3	Motor	10-13	"A" (Normal)	13 sockets	23	Amphenol Micro38999: 2M805-005-02M10-13SA (sockets)	Amphenol Micro38999: 2M805-001-16M10-13PA (pins)
J4	Feedback	12-26	"A" (Normal)	26 sockets	23	Amphenol Micro38999: 2M805-005-02M12-26SA (sockets)	Amphenol Micro38999: 2M805-001-16M12-26PA (pins)

Notes:

1. Nova part numbers shown are for standard connectors. For space-rated configuration, (selected via the Radiation Hardened Option -- See ordering information on page 15), outgassed connectors are utilized.
2. Mating connectors shown are standard, non-outgassed versions. Contact your connector company for outgassed versions for space-rated harness assemblies.
3. Pinout is the same on flight units and prototypes

This document does not contain Technical Data or Technology as defined the ITAR Part 120.10 or EAR Part 772.

© 2020 ESI Motion – ESI Proprietary

Nova Interconnect Diagram

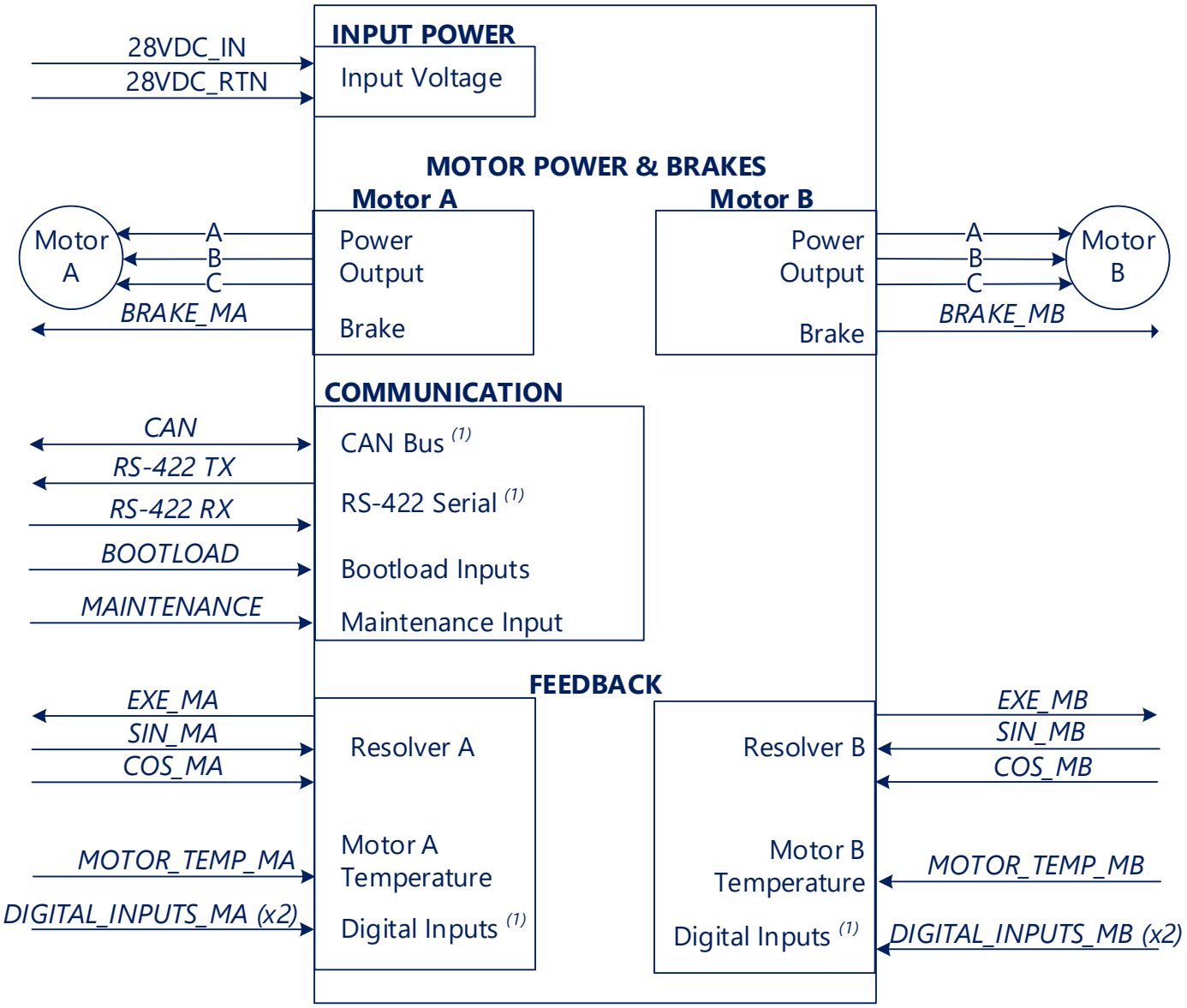

NOTES:

1. Safety-critical software baseline uses CAN.
   For RS-422 and digital inputs, contact ESI Motion with your requirements.
2. *Signals shown in italics indicate differential (high and low) signal pairs.*
3. Connector shells and mounting holes are connected to chassis ground.

This document does not contain Technical Data or Technology as defined the ITAR Part 120.10 or EAR Part 772.

© 2020 ESI Motion – ESI Proprietary

Interfaces Description

Overview

The Nova Servo Drive incorporates our EMI filter, power supply, rugged controller and power and brake drives into a military grade package. Nova is designed for space and military applications, featuring radiation tolerant and DO-178C safety critical options. This section describes application interfaces for the Nova by functional group. The groups and their connectors are: Power Input (J1), Communications (J2), Motor Power (J3), and Feedback (J4).

Power Input

Input power (Nominal 28 VDC) is used for V_{BUS} (converted to motor power) and is converted to secondary voltages to run internal electronics.

Communications Interface

Communication busses, or networks, are the main User Interfaces with the Nova in an end application. Networking has been emphasized in the communication interface to the Nova, which can connect to CAN Bus or RS-422 Serial interfaces. For motor control, CAN Bus is strongly preferred, since it is ideal for real-time embedded networking – it has been proven to be stable and robust, as well as flexible, and is used in the Safety Critical DO-178C Baseline Software. (For other serial motor control options, please contact ESI with your system requirements). A CAN Bus connection is all that's necessary to control Nova.

Using CAN, the Nova Servo Drive can easily be modified through software, to accept commands and report feedback, without hardware modification, using ESI's Host Interface for Drive/Servo Controller (HiDS, see page 8). Shorting J2 pins "Maintenance+" to "Maintenance –" enables HiDS. These interfaces have a defined software protocol, and provide the user with complete flexibility in controller configuration, commands, and feedback.

The CAN physical interface is compliant to the ISO 11898-2 specification, with a maximum data rate of 1 Mbps for a bus length of up to 40 meters, and meets the extended common mode range of -7 to +12 V. The RS-422 physical interface is compliant to the TAI/EIA-422 specification, is capable of a 1 Mbps data rate, and is short circuit protected from -7 V to +12V.

Note: for maximum System flexibility, no internal CAN bus termination is provided (so the User must provide them, as required. This can be added in the wire harness. (During development, a DB9 connector version is available from Grid Connect, Inc., as Part Number GC-CAN-TERM-GC).

Communication commands (and Digital Input signals on J4 connector) can be configured by ESI Motion's "HiDS" motor controller software tool for test control or status functions.

These inputs may be configured through software as control or test inputs. In Control Mode, the signal may be used to give the Nova Servo Drive a torque or velocity command. In Test Mode, the signal may be used to inject a test signal into the system.

Note: The Safety Critical DO-178C Baseline Software uses commands and status communicated via CAN.

Shorting J2 pins Bootload+ to Bootload– commands Nova to accept a software download via CAN.

Motor Power

Motor Power outputs three-phase power to the motors. Two 28V brake drivers are provided. Software can be configured to limit brake current, including a profile which limits it at a higher current for an activation duration, then a reduced, hold current.

The Nova uses sinusoidal (sine) drive technology for the best efficiency while minimizing torque ripple. This technology is suitable for high performance application such as reaction wheels and precision pointing.

Motor Feedback

The Motor Feedback connections for Motor A and Motor B provide resolver feedback (for other feedback options, please contact ESI Motion). The J4 connector also has motor temperature inputs.

The temperature input is an active circuit that measures a Positive Temperature Coefficient (PTC) Resistance Temperature Detector (RTD), which is directly proportional to motor temperature. The temperature vs. resistance polynomial can be configured through software.

Four digital differential inputs are provided (which can be used with HiDS, as described above). The digital inputs are ESD protected to 2kV.

Radiation Hardened

Optional: The Nova can be Radiation Hardened, for use in Low Earth Orbit (LEO) applications.

DO-178C Safety Critical Certification

For applications requiring DO-178C certification, ESI Motion has designed Nova's Baseline Software, which can be tailored to your system's requirements, resulting in a lower time to deployment, cost savings and reduced risk.

Mechanical Interface

The Nova is housed in a compact, rugged chassis. Military circular connectors ensure the Nova is ready for the harshest environments.

This document does not contain Technical Data or Technology as defined the ITAR Part 120.10 or EAR Part 772.

ESI Motion's HiDS Application

The Host Interface for Drive/Servo Controller (HiDS) is ESI Motion's servo motor controller software tool.

This innovative application allows users to configure a servo motor control system quickly, and with a great deal of flexibility. It's based upon a configurable, user-friendly GUI, with an integrated oscilloscope feature. Extensive data collection and control allows system tuning and troubleshooting.

On Nova, the HiDS functions can be accessed via CAN. HiDS and the Controller User's Manual can be downloaded from ESI Motion's website at:

ESI's motion control products employ industry-standard current-loop, velocity-loop, and in some applications, a position-loop. Each of these control loops utilizes Proportional, Integral, and Derivative (PID) error correction to achieve the desired performance. The Controller User's Manual includes a procedure for tuning each control loop to match the intended application. After the tuning is completed, additional initial configuration using feedback is described in detail.

The Controller User's Manual walks you through the steps to set up limits, enter motor parameters, and tune the motor using the desired loop configuration. An excerpt from the summary tab shown below is an example view of key device configuration parameters:

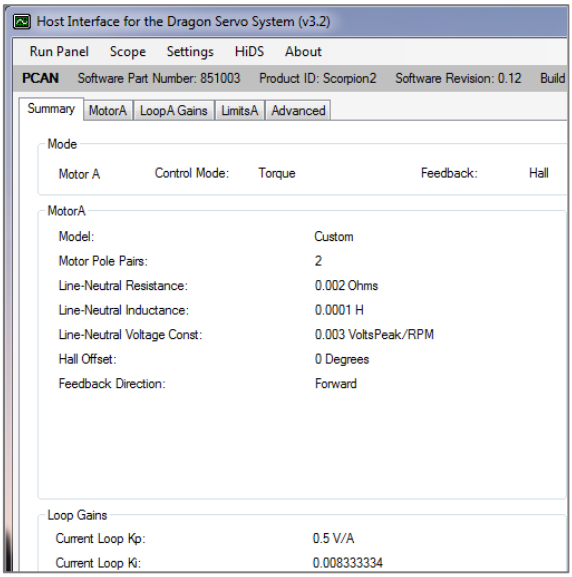

HiDS allows extreme flexibility via simply changing parameters, without the need to reload custom software.

The HiDS Run Panel facilitates control commands and monitoring of parameters such as motor speed and current:

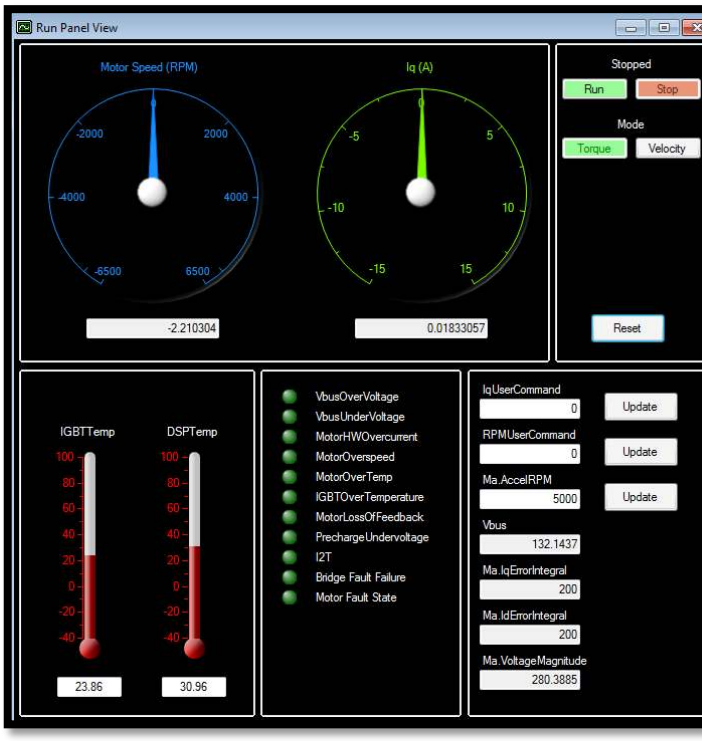

A typical velocity-loop step response, displayed on the built-in oscilloscope function, is shown below:



The design of the ESI Motion Nova Servo Controller and HiDS tool allow for tremendous flexibility and capabilities in motor control and monitoring, to ensure success of the most challenging motion control applications.

This document does not contain Technical Data or Technology as defined the ITAR Part 120.10 or EAR Part 772.

© 2020 ESI Motion – ESI Proprietary

Mechanical Diagrams, Flight Units:

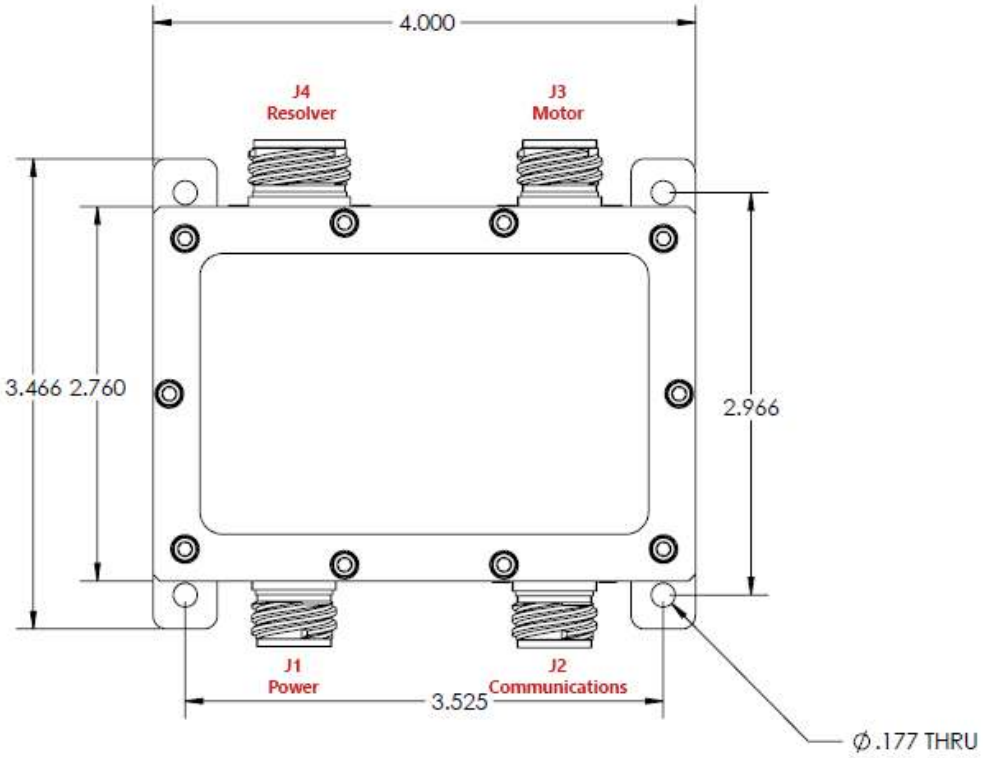

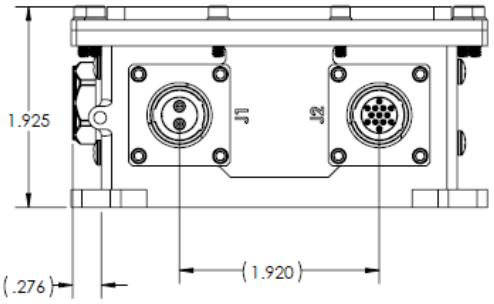

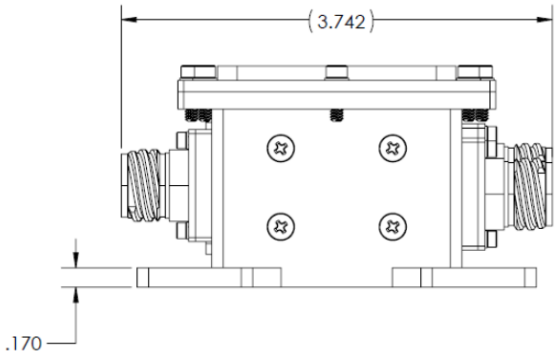

This document does not contain Technical Data or Technology as defined the ITAR Part 120.10 or EAR Part 772.

© 2020 ESI Motion – ESI Proprietary

Mechanical Diagrams, Prototypes:

Prototypes (also known as Engineering Development Units) allow for rapid lab-use integration and software development.

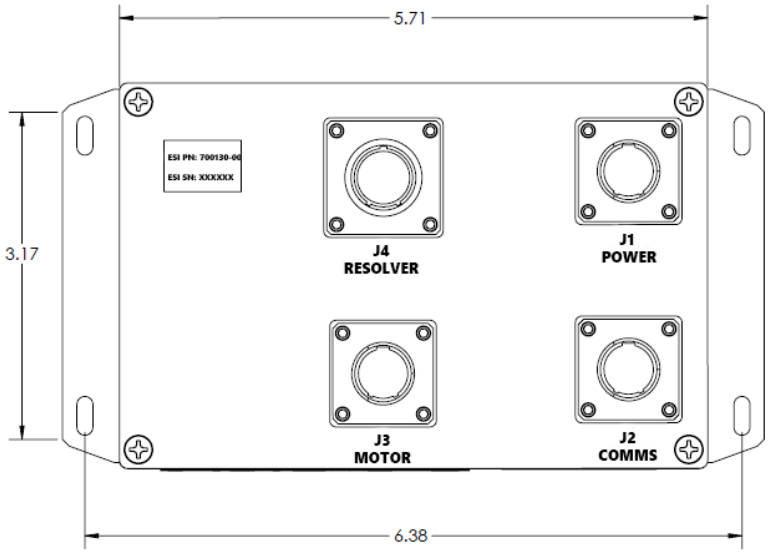

TOP VIEW

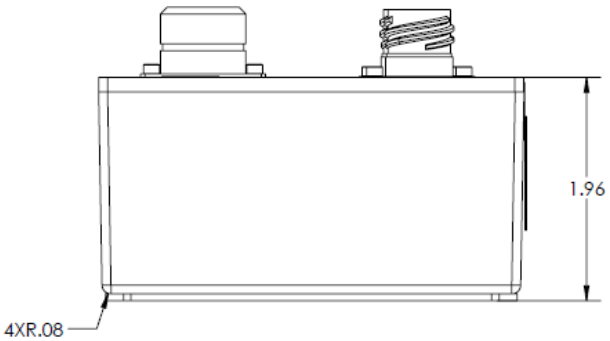

LEFT VIEW

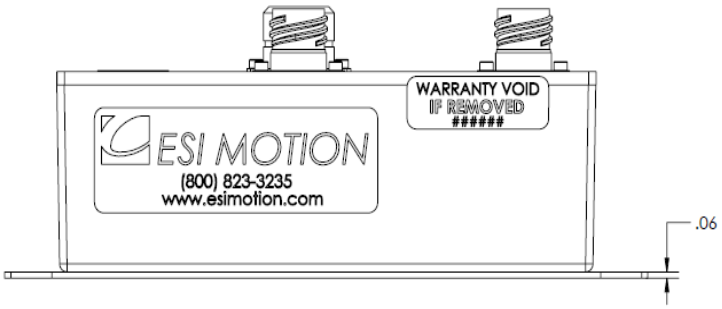

FRONT VIEW

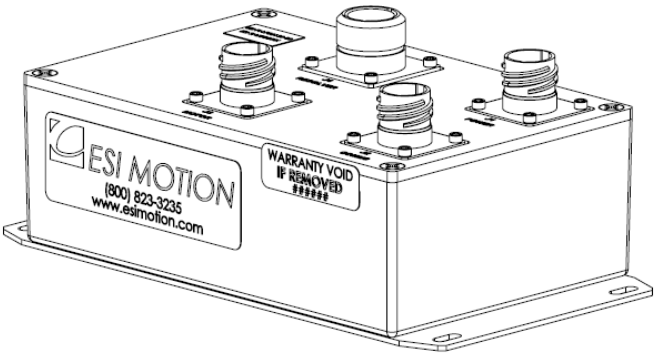

All dimensions are in inches.

This document does not contain Technical Data or Technology as defined the ITAR Part 120.10 or EAR Part 772.

ELECTRICAL INTERFACES

Signal and Voltages Descriptions

For details using HiDS and associated signals, please refer to the Controller User's Manual, downloadable from ESI Motion's website at:

For electrical characteristics, see Recommending Operating Conditions and Absolute Maximum Values Tables.

Name	I/O	Description
Input Power	I	Input Power (Nominal 28 VDC) is used for V_{BUS} (converted to Motor Power) and is converted to secondary voltages to run internal electronics
Motor X Phase A/B/C	O	3-phase output power to Motor (sinusoidal, 28 Volts). Hardware has the capacity of 12.5A maximum, but baseline software limits this to 5A.
Brake X Power+/-	O	28V brake output, under software control. Hardware has the capacity of 6.25A maximum, but software can be configured to limit brake current, including a profile which limits it at a higher current for an activation duration, then a reduced, hold current.
CAN+/-	I/O	CAN Bus differential serial communication: commands and status. CAN is the preferred communication, and is used in the DO-178C Baseline. Compliant to the ISO 11898-2 specification. Treat as open drain. Pulled up internally. Interface has internal 10KΩ termination. IMPORTANT NOTE: External 120-Ohm termination is required on the mating harness.
RS-422+/-	I/O	Alternate RS-422 Serial Bus differential serial communication: commands and status. Compliant to ANSI/TIA/EIA-422. Baud rate: 115200 bps. Interface has internal 200Ω termination. See also RS-422_GND, below. Note: Safety-Critical Software Baseline uses CAN. For RS-422 use, contact ESI Motion with your requirements.
RS-422_GND	--	Isolated RS-422 (Field) Ground (isolated from GND). Use of this connection is recommended for highest signal integrity.
Motor Temp X+/-	I	Two wire interface for a Resistance Temperature Detector (RTD). Recommended RTD: IEC 60751 Class B, 1KΩ (Contact ESI Motion for alternate devices)
Resolver X Excitation+/-	O	Resolver Excitation output (reference signal to a resolver)
Resolver X Sin/Cos+/-	I	Resolver inputs provide motor position information
BOOTLOAD+/-	I	Bootloading (loading software via CAN) is activated by shorting BOOTLOAD+ to BOOTLOAD-.
Maintenance+/-	I	Maintenance (enables HiDS via CAN) is activated by shorting Maintenance+ to Maintenance-.
Digital In X+/-	I	Differential Digital Input (switch closure). Activated when the + and – lines are shorted. Inactive when open. That is, < 1 ohm = active, >1Mohm = inactive These flexible signals can be mapped to enable the drive or other functions. See the Controller User's Manual for more information. Contact ESI Motion with your requirements for these interfaces.
CGND or CHA	--	Chassis (Case) Ground (connected to connector outer shells and mounting holes)

Notes:

1. An "X" is used to indicate signals for Motor A or B. +/- indicates differential pairs.

This document does not contain Technical Data or Technology as defined the ITAR Part 120.10 or EAR Part 772.

© 2020 ESI Motion – ESI Proprietary

Connector Pinouts

J1: Power Input -- Pinout Assignments

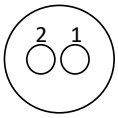

View looking into chassis pins

J1 connector provides Power Input on a 2-contact connector. See diagram above for pinout numbering.
See page 5 for part number and mating connector information. For locations, see diagrams on pages 9 & 10.
See also Mechanical Drawings, for physical details.

J1 PIN	NAME	DESCRIPTION	CURRENT RATING (A)	CONTACT SIZE	TYPE
1	28VDC_PWR_RTN	28VDC Return	5	23	Power Return
2	28VDC_PWR	28VDC In	5	23	Power Input

J2: Communication -- Pinout Assignments

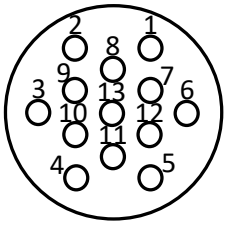

View looking into chassis pins

J2 connector provides Communication on a 13-contact connector. See diagram above for pinout numbering.
See page 5 for part number and mating connector information. For locations, see diagrams on pages 9 & 10.
See also Mechanical Drawings, for physical details.

J2 PIN	NAME	DESCRIPTION	TYPE
1	RS-422_TX- (1)	RS-422 Serial Bus Transmit (-)	RS-422
2	RS-422_TX+ (1)	RS-422 Serial Bus Transmit (+)	RS-422
3	CAN+	CAN Serial Bus (+)	CAN Bus
4	MAINTENANCE- (3)	Maintenance (-)	Digital Input
5	BOOTLOAD- (2)	Bootloader (-)	Digital Input
6	RS-422_GND	RS-422 Ground	Isolated RS-422 Ground
7	BOOTLOAD+ (2)	Bootloader (+)	Digital Input
8	MAINTENANCE+ (3)	Maintenance (+)	Digital Input
9	CAN-	CAN Serial Bus (-)	CAN Bus
10	RS-422_RX- (1)	RS-422 Serial Bus Receive (-)	RS-422
11	RS-422_RX+ (1)	RS-422 Serial Receive (+)	RS-422
12	Reserved	Reserved	Digital Input
13	Reserved	Reserved	Digital Input

Notes:

1. Safety-Critical Software Baseline uses CAN. For RS-422, contact ESI Motion with your requirements.
2. Bootloading (loading software via CAN) is active by shorting BOOTLOAD+ to BOOTLOAD-
3. Maintenance Mode, which enable HiDS, is active by shorting MAINTENANCE+ to MAINENANCE-.

This document does not contain Technical Data or Technology as defined the ITAR Part 120.10 or EAR Part 772.

© 2020 ESI Motion – ESI Proprietary

J3: Motor -- Pinout Assignments

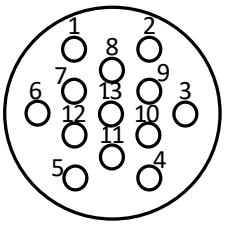

View looking into chassis <u>sockets</u>

J3 connector provides Motor Power Output on a 13-contact connector. See diagram above for pinout numbering. See page 5 for part number and mating connector information. For locations, see diagrams on pages 9 & 10. See also Mechanical Drawings, for physical details.

J3 PIN	NAME	DESCRIPTION	TYPE
1	MA_PHASE_A	Motor A Phase A	Power Output
2	MA_PHASE_B	Motor A Phase B	Power Output
3	MA_PHASE_C	Motor A Phase C	Power Output
4	BRAKE+_MA	Brake, Motor A (+)	Brake Output
5	BRAKE-_MA	Brake, Motor A (-)	Brake Output
6	RESERVED	Reserved (No Connect)	N/A
7	RESERVED	Reserved (No Connect)	N/A
8	MB_PHASE_A	Motor B Phase A	Power Output
9	MB_PHASE_B	Motor B Phase B	Power Output
10	MB_PHASE_C	Motor B Phase C	Power Output
11	BRAKE+_MB	Brake, Motor B (+)	Brake Output
12	BRAKE-_MB	Brake, Motor B (-)	Brake Output
13	RESERVED	Reserved (No Connect)	N/A

This document does not contain Technical Data or Technology as defined the ITAR Part 120.10 or EAR Part 772.

J4: Feedback -- Pinout Assignments

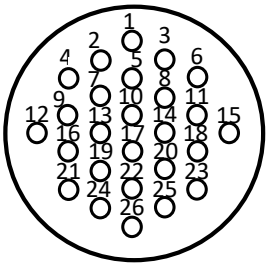

View looking into chassis <u>sockets</u>

J4 connector provides Feedback on a 26-contact connector. See diagram above for pinout numbering.
See page 5 for part number and mating connector information. For locations, see diagrams on pages 9 & 10.
See also Mechanical Drawings, for physical details.

J4 PIN	NAME	DESCRIPTION	TYPE
1	EXE+_MA	Resolver Excitation (+) Motor A	Resolver Output
2	EXE-_MA	Resolver Excitation (-) Motor A	Resolver Output
3	MTR_TEMP+_MA	Temperature (+) Motor A	Temperature Sensor Input
4	SIN+_MA	Resolver Sin (+) Motor A	Resolver Input
5	MTR_TEMP-_MA	Temperature (-) Motor A	Temperature Sensor Input
6	RESERVED	Reserved (No Connect)	N/A
7	EXE+_MB	Resolver Excitation (+) Motor B	Resolver Output
8	DIN2+_MB (1)	Digital Input 2 (+) Motor B	Differential Digital Input
9	EXE-_MB	Resolver Excitation (-) Motor B	Resolver Output
10	DIN2-_MB (1)	Digital Input 2 (-) Motor B	Differential Digital Input
11	DIN1-_MB (1)	Digital Input 1 (-) Motor B	Differential Digital Input
12	SIN-_MA	Resolver Sin (-) Motor A	Resolver Input
13	RESERVED	Reserved (No Connect)	N/A
14	MTR_TEMP-_MB	Temperature (-) Motor B	Temperature Sensor Input
15	DIN2-_MA (1)	Digital Input 2 (-) Motor A	Differential Digital Input
16	SIN+_MB	Resolver Sin (+) Motor B	Resolver Input
17	MTR_TEMP+_MB	Temperature (+) Motor B	Temperature Sensor Input
18	DIN1+_MB (1)	Digital Input 1 (+) Motor B	Differential Digital Input
19	SIN-_MB	Resolver Sin (-) Motor B	Resolver Input
20	COS-_MB	Resolver Cos (-) Motor B	Resolver Input
21	COS+_MA	Resolver Cos (+) Motor A	Resolver Input
22	COS+_MB	Resolver Cos (+) Motor B	Resolver Input
23	DIN2+_MA (1)	Digital Input 2 (+) Motor A	Differential Digital Input
24	COS-_MA	Resolver Cos (-) Motor A	Resolver Input
25	DIN1-_MA (1)	Digital Input 1 (-) Motor A	Differential Digital Input
26	DIN1+_MA (1)	Digital Input 1 (+) Motor A	Differential Digital Input

Notes:

1. Differential Digital Inputs: contact ESI Motion with your requirements for these interfaces.

This document does not contain Technical Data or Technology as defined the ITAR Part 120.10 or EAR Part 772.

© 2020 ESI Motion – ESI Proprietary

Ordering Information

N XXA YYYV F D -R -S

- **Servo Drive**: N – Nova
- **Nominal Continuous Current** [1]: 5A
- **Voltage**: 28V
- **Form Factor**: P – Prototype[2], F – Flight
- **Configuration**: D – Dual-Axis
- **Options (Select all applicable)**:
  - -R – Radiation Hardened Option[3]
  - -S – Safety-Critical DO-178C Certification Option

1. Peak Sine Wave, per axis. Consult factory for higher current options.
2. Prototype: Engineering Development Unit (larger form factor, for lab use / initial development)
3. Radiation Hardened Option includes Space-rated, outgassed connectors

Example: Part Number: N05A028VFD-R-S
Servo Drive: Nova
Continuous Current: 5A
Nominal Voltage: 28V
Form Factor: Flight Unit
Configuration: Dual-Axis
Radiation Option: Rad Hard
Safety-Critical Option: DO-178C Certification



Model Availability List

The following table lists available models:

Dual Axis:	
5A	**N05A028VFD-R** N05A028VFD-R-S **N05A028VFD** **N05A028VPD**
A/V	**28V**

Notes:
1. Standard Products are shown in bold, and have expedited lead times.
2. Radiation Hardened Option available.
3. Please contact ESI for Customization, other feedback options or motor types.

This document does not contain Technical Data or Technology as defined the ITAR Part 120.10 or EAR Part 772.

© 2020 ESI Motion – ESI Proprietary