106911

| PARTS LIST | | | |
|---|---|---|---|
| ITEM | QTY | PART NUMBER | DESCRIPTION |
| 1 | 1 | 107051 | Ø6.0 O2 Heater Assembly, BOM |

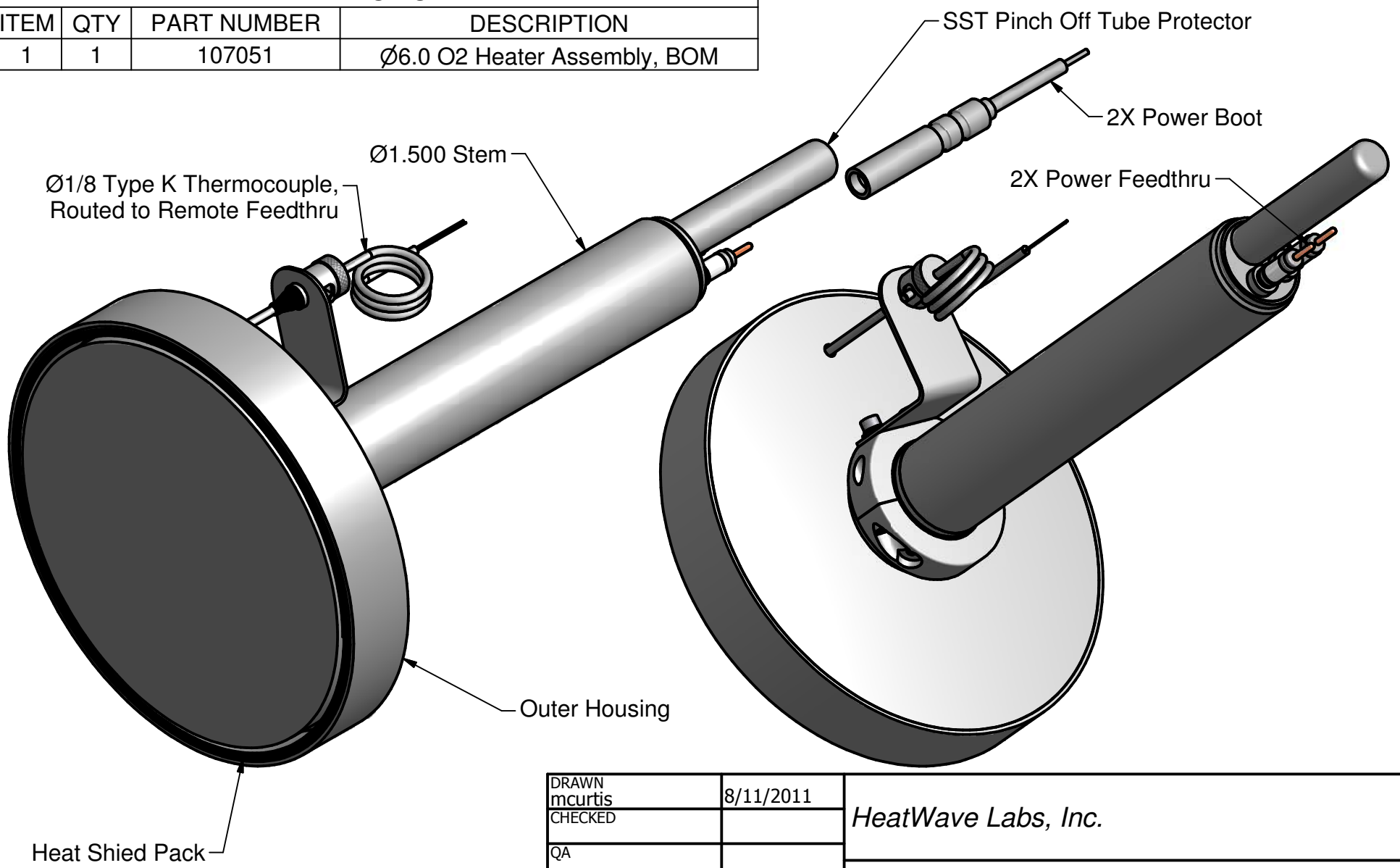


| | | |
|---|---|---|
| DRAWN mcurtis | 8/11/2011 | *HeatWave Labs, Inc.* |
| CHECKED | | |
| QA | | Ø6.0 O2 Heater Assembly w/Ø1.50 Stem, Sealed |
| MFG | | |
| APPROVED | | |
| Material: - | | SIZE A \| Cage Code: 1YAN4 \| DWG NO 106911 \| REV |
| | | SCALE 1/2 \| SHEET 1 OF 2 |

This document is the property of HeatWave Labs.
Its contents may not be reproduced without
express written permission of HeatWave Labs.

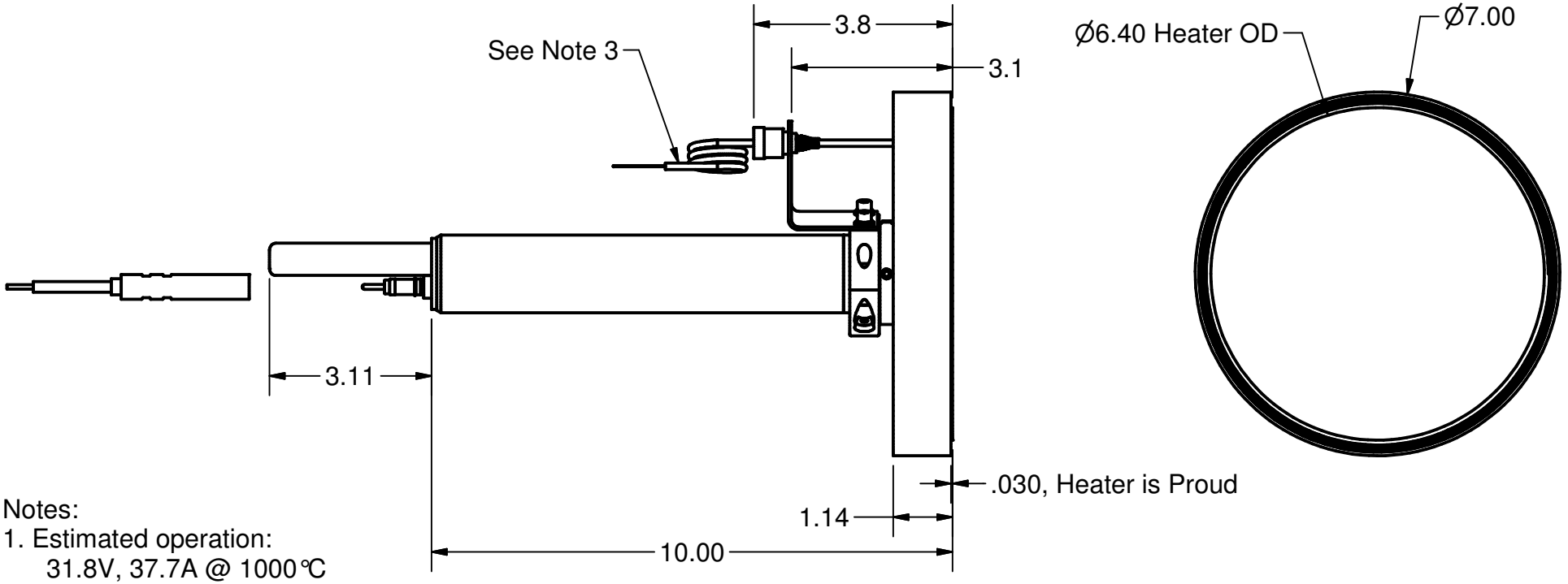





Notes:
1. Estimated operation:
31.8V, 37.7A @ 1000℃
The sited temperature is the heater face temperature under optimum conditions.
2. All materials exposed to the chamber atmosphere shall be Hastelloy C-22 with the exception of the following:
Thermocouple sheaths
Inconel TC Springs
SST TC Bracket
SST TC Bayonet Mount Hardware
3. TC shown does not demonstrate actual TC length. The TC shall be a total length of 24" sheathed length with 6" long flying leads. The sheath is terminated with epoxy to be passed through a feedthru so only the sheath is exposed to the chamber atmosphere.
4. This heater has a sealed filament. It is housed in a vacuum and is not at either chamber or room atmosphere.

This document is the property of HeatWave Labs. Its contents may not be reproduced without express written permission of HeatWave Labs.

| | | |
|---|---|---|
| DRAWN mcurtis | 8/11/2011 | *HeatWave Labs, Inc.* |
| CHECKED | | |
| QA | | |
| MFG | | |
| APPROVED | | |

Ø6.0 O2 Heater Assembly
w/Ø1.50 Stem, Sealed

| SIZE | | DWG NO | REV |
|---|---|---|---|
| A | | 106911 | |
| SCALE 1/3 | | SHEET 2 OF 2 | |