efector200

O1D100

O1DLF3KG

Photoelectric sensors

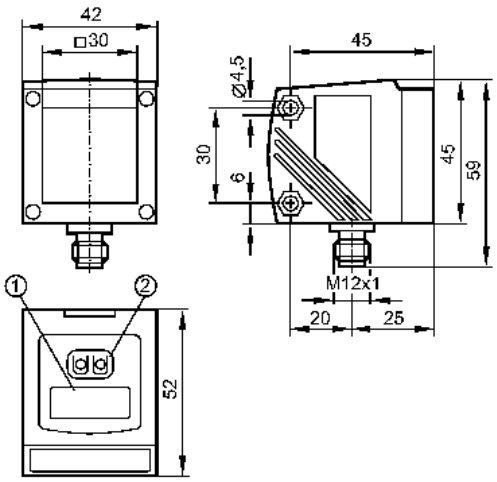

1: 4-digit alphanumeric display
2: Programming buttons

Product characteristics		
Photoelectric distance sensor		
Quick disconnect		
Visible laser light, protection class 2 laser		
4-digit alphanumeric display		
Measuring range 0.2...10 m (Range referred to white paper 200 x 200 mm, 90 % remission)		
Application 0...19 m		
Application		
Application	[m]	0...19
Electrical data		
Electrical design		DC PNP
Operating voltage	[V]	18...30 DC *)
Current consumption	[mA]	< 150
Life expectancy typ.	[h]	50000
Protection class		III
Reverse polarity protection		yes
Outputs		
Output function		OUT1: normally open / closed programmable OUT2: normally open / closed programmable or analog (4...20 mA / 0...10 V, scalable)
Current rating	[mA]	2 x 200
Short-circuit protection		yes (non-latching)
Overload protection		yes
Analog output		
current output	[mA]	4...20; according to IEC 61131-2
- Max. load	[Ω]	250
voltage output	[V]	0...10; according to IEC 61131-2
- Min. load	[Ω]	5000
Monitoring range		
Light spot diameter	[mm]	< 15 x 15 (Range 10 m)

efector200

O1D100

O1DLF3KG

Photoelectric sensors

Measuring / setting range		
Measuring range	[m]	0.2...10 (Range referred to white paper 200 x 200 mm, 90 % remission)
Sampling rate	[Hz]	1...50
Environment		
Ambient temperature	[°C]	-10...60
Protection		IP 67
Tests / approvals		
EMC		EN 60947-5-2
MTTF	[Years]	186
Mechanical data		
Housing materials		housing: diecast zinc; window: glass; LED window: polycarbonate
Weight	[kg]	0.291
Displays / operating elements		
Display		Switching status 2 x LED yellow Power LED green Distance, programming 4-digit alphanumeric display
Electrical connection		
Connection		M12 connector

Wiring



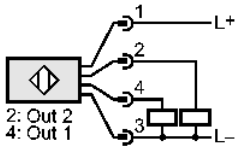

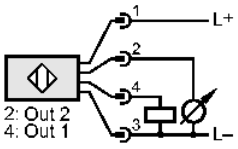

Accessories		
Accessories (optional)		Protective cover E21133
Remarks		
Remarks		*) cULus - Class 2 source required Caution: Laser Light Power <= 4.1 mW wavelength = 650 nm pulse 1.3 ns Do not stare into beam Avoid exposure Class 2 laser product EN 60825-1:2003-10 For more information about the measuring range / application please refer to the operating instructions.
Pack quantity	[piece]	1

Other data

Parameter	Setting range	Factory setting
Uni	mm, m, inch	mm
OU1	Hno, Hnc, Fno, Fnc	Hno
SP1	200...9999	1000
nSP1	200...9999	800
FSP1	200...9999	1200
OU2	Hno, Hnc, Fno, Fnc, I, U	I

SP2	200...9999	2000
nSP2	200...9999	1800
FSP2	200...9999	2200
ASP	0...9999	0
AEP	0...9999	9999
rATE [Hz]	1...50	50
dS1	0...0.1...5	0
dr1	0...0.1...5	0
dS2	0...0.1...5	0
dr2	0...0.1...5	0
dAP	0...0.1...5	0
dIS	d1..3; rd1...3; OFF	d3

Repeatability / Accuracy
Sampling rate 50 Hz - extraneous light on the object max.: 40 klx

	Repeatability of the measured values		Accuracy	
	white (90 % remission)	grey (18 % remission)	white (90 % remission)	grey (18 % remission)
200...1000 mm	± 5.0 mm	± 7.5 mm	± 15.0 mm	± 18.0 mm
1000...2000 mm	± 5.5 mm	± 10.0 mm	± 15.0 mm	± 20.0 mm
2000...4000 mm	± 17.5 mm	± 22.5 mm	± 25.0 mm	± 32.0 mm
4000...6000 mm	± 27.5 mm	± 40.0 mm	± 35.0 mm	± 50.0 mm
6000...10000 mm	± 60.0 mm	--	± 70.0 mm	--

Repeatability / Accuracy
Sampling rate 50 Hz - extraneous light on the object max.: 40...100 klx

	Repeatability of the measured values		Accuracy	
	white (90 % remission)	grey (18 % remission)	white (90 % remission)	grey (18 % remission)
200...1000 mm	± 16.5 mm	± 16.5 mm	± 26.5 mm	± 26.5 mm
1000...2000 mm	± 16.5 mm	± 16.5 mm	± 26.5 mm	± 26.5 mm
2000...4000 mm	± 30.0 mm	± 37.0 mm	± 40.0 mm	± 47.0 mm
4000...6000 mm	± 37.0 mm	± 57.0 mm	± 47.0 mm	± 67.0 mm
6000...10000 mm	± 75.0 mm	--	± 85.0 mm	--

Repeatability / Accuracy
Sampling rate 1 Hz - extraneous light on the object max.: 40 klx

	Repeatability of the measured values		Accuracy	
	white (90 % remission)	grey (18 % remission)	white (90 % remission)	grey (18 % remission)
200...1000 mm	± 4.0 mm	± 4.5 mm	± 14.0 mm	± 15.0 mm
1000...2000 mm	± 4.5 mm	± 6.0 mm	± 14.5 mm	± 16.0 mm
2000...4000 mm	± 13.5 mm	± 14.5 mm	± 23.5 mm	± 24.0 mm
4000...6000 mm	± 19.0 mm	± 21.0 mm	± 29.0 mm	± 31.0 mm
6000...10000 mm	± 37.0 mm	--	± 47.0 mm	--

Repeatability / Accuracy
Sampling rate 1 Hz - extraneous light on the object max.: 40...100 klx

	Repeatability of the measured values		Accuracy	
	white (90 % remission)	grey (18 % remission)	white (90 % remission)	grey (18 % remission)
200...1000 mm	± 10.0 mm	± 10.0 mm	± 20.0 mm	± 20.0 mm
1000...2000 mm	± 10.0 mm	± 10.0 mm	± 20.0 mm	± 20.0 mm
2000...4000 mm	± 17.0 mm	± 18.0 mm	± 27.0 mm	± 28.0 mm
4000...6000 mm	± 22.0 mm	± 25.0 mm	± 32.0 mm	± 35.0 mm

6000...10000 mm	± 37.0 mm	--	± 47.0 mm	--

Range on black (6 % remission) <= 4000 mm
The values apply at
- constant ambient conditions: 23 °C / 960 hPa
- minimum power-on time in minutes: 10