K0104

Thrust pads neoprene

Item description/product images



Description

Material:
Neoprene with steel insert

Version:
Black, oil-resistant.
Insert trivalent passivated.

Note:
The neoprene thrust pad with order No. K0104.45 is supplied without steel insert or thread.

Drawings

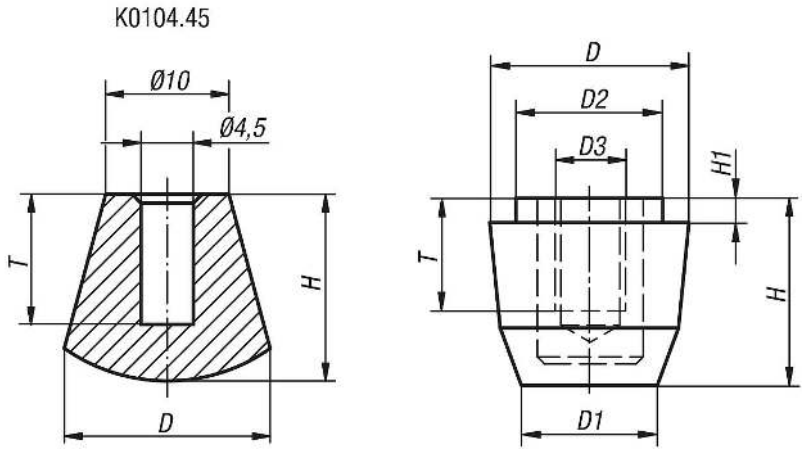

Overview of items

Thrust pads neoprene

Order No.	D	D1	D2	D3	H	H1	T
K0104.45	12	-	-	-	10	-	7
K0104.06	15	10,3	10,8	M6	14,4	2	5,5
K0104.08	19,5	13,5	15	M8	18	2,5	9
K0104.10	23	16	17	M10	21	3	8
K0104.12	25,5	18,5	21	M12	23,7	3	10,8