K0388

Gripper studs

Item description/product images





Description

Material:
Hardened tool steel or carbide.

Version:
Black oxidised.

Note:
The full thread on the grippers allows exact adjustment to the clamping application.
The carbide tips are soldered in.

Drawing reference:
Form A: tool steel
Form B: tool steel, carbide diamond grip
Form C: 4-point carbide insert

Drawings

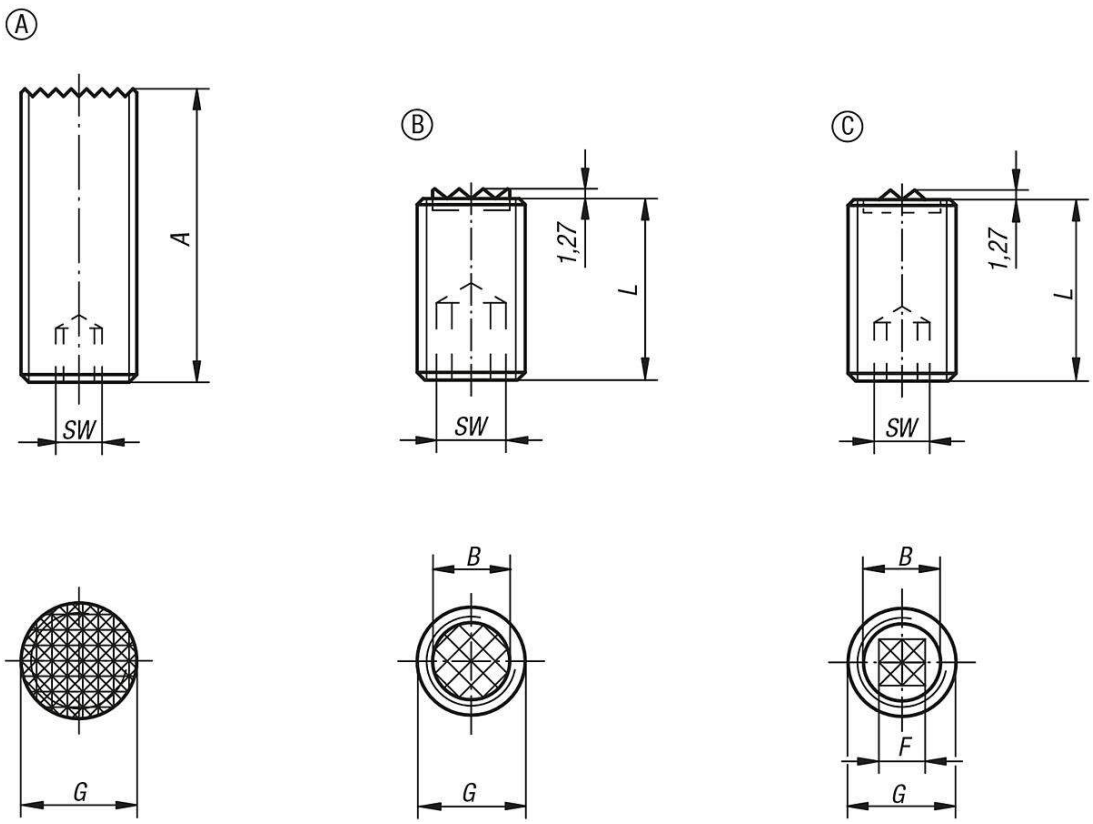

Gripper studs

Overview of items

Gripper studs

Order No.	Form	A	L	B	G	F	SW
K0388.4010	A	40	-	-	M10	-	3
K0388.4012	A	40	-	-	M12	-	5
K0388.4016	A	40	-	-	M16	-	6
K0388.4020	A	40	-	-	M20	-	8
K0388.2510	B	-	25	6,4	M10	-	5
K0388.5010	B	-	50	6,4	M10	-	5
K0388.2512	B	-	25	7,9	M12	-	6
K0388.5012	B	-	50	7,9	M12	-	6
K0388.2516	B	-	25	11,2	M16	-	8
K0388.5016	B	-	50	11,2	M16	-	8
K0388.2520	B	-	25	12,7	M20	-	10
K0388.5020	B	-	50	12,7	M20	-	10
K0388.25124	C	-	25	7,9	M12	6,5	6
K0388.50124	C	-	50	7,9	M12	6,5	6
K0388.25164	C	-	25	11,2	M16	8	8
K0388.50164	C	-	50	11,2	M16	8	8
K0388.25204	C	-	25	12,7	M20	8	10
K0388.50204	C	-	50	12,7	M20	8	10