Tubular connection elements



Technical information
on the tubular connection system in thermoplastic

The tubular connection system stands out particularly thanks to its attractive design and a special reducing bush concept.

This unique concept and the associated clamping of the most varied diameters and tube cross-sections permit a flexibility never before achieved.

Just by replacing the bush, an existing tubular construction can be transformed into one with a different diameter or cross-section.

Benefits:
- Only one clamping element per construction type
- Tube reduction (from Ø12–30 or □10–25) by means of different reducing bushes for round tubes or square tubes
- Tube diameter indication on each reducing bush
- Bushes torsion prevention inside the clamping element

”Closed” system (one-piece basic form)

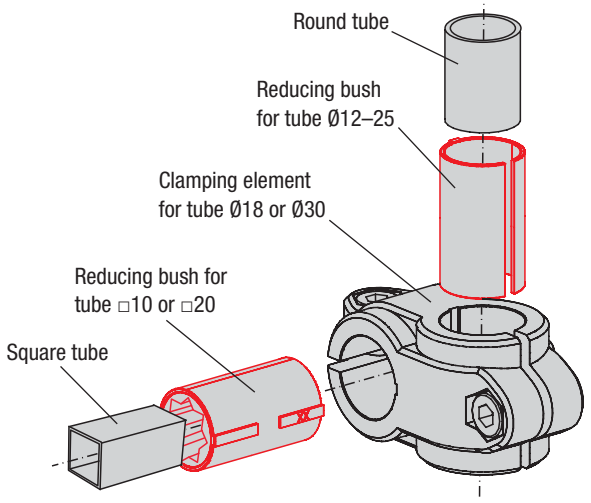

Note:
The clamping elements are supplied as standard with a DIN 7984 screw and a DIN 985 self-locking nut. Clamp levers in plastic for fixing available on request.

”Half-cup” elements (two-pieces basic form)

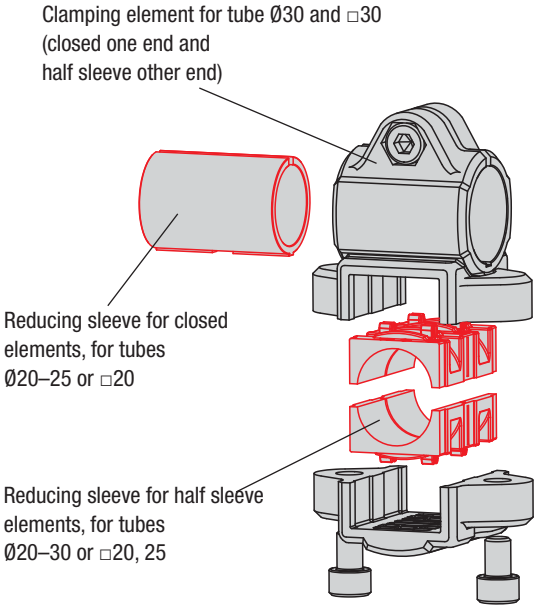

Cross clamps, plastic

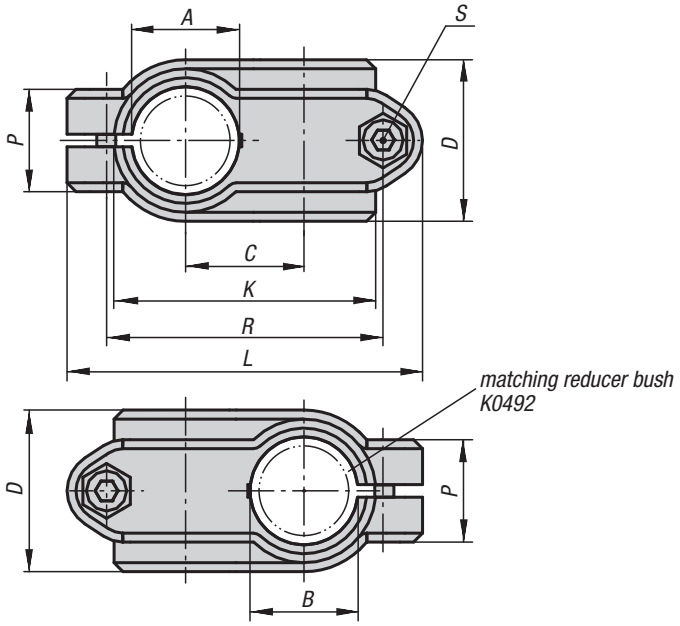



Material, surface finish:
Black thermoplastic; socket head screw to DIN 7984 and hexagon nut to DIN 985 in galvanized steel

Sample order:
K0472.1818

Note:
The basic size for round tubes is Ø18 mm or Ø30 mm. If smaller tubes are to be clamped or converted from round to square tubes, these can be adjusted to the required fitting by means of reducing bushes K0492.

On request:
Clamp levers in plastic for fixing.

Accessory:
- Reducing bushes K0492
- Round and square tubes K0493

KIPP Cross clamps, plastic

Order No.	A	B	C	D	K	L	P	R	S	Approx. weight kg
K0472.1818	18	18	20	30	48	63	21	48	M6x18	0,050
K0472.3030	30	30	33	45	72	99	28,5	77	M8x25	0,132

Application using tube connection



Cross clamps, aluminium



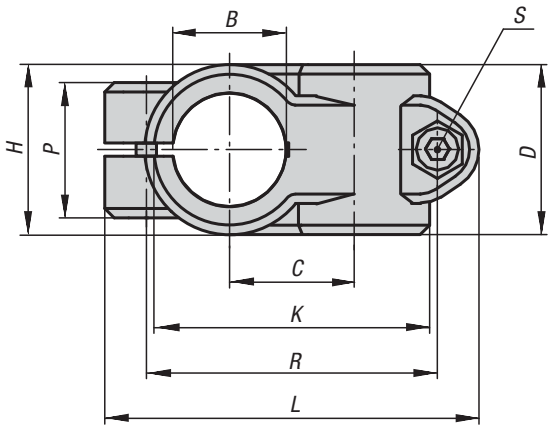

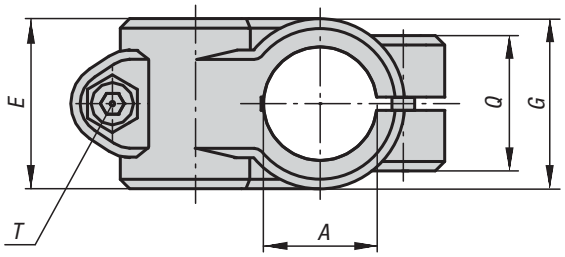

Material, surface finish:
Cast aluminium, vibration ground; socket head screw to DIN 7984 and hexagon nut to DIN 985 in galvanized steel

Sample order:
K0472.51818

On request:
Clamp levers for fixing.

Accessory:
- Round and square tubes K0493

KIPP Cross clamps, aluminium

Order No.	A	B	C	D	E	G	H	K	L	P	Q	R	S	T	Approx. weight kg
K0472.51212	12,1	12,1	20	25,5	25,5	-	-	43,5	66	23	23	51	M6x20	M6x20	0,080
K0472.51414	14,1	14,1	20	25,5	25,5	-	-	43,5	66	22	22	51	M6x20	M6x18	0,070
K0472.51515	15,1	15,1	20	25,5	25,5	-	-	43,5	66	22	22	51	M6x20	M6x18	0,069
K0472.51616	16,1	16,1	20	25,5	25,5	-	-	43,5	66	22	22	51	M6x20	M6x18	0,066
K0472.51818	18,1	18,1	20	25,5	25,5	-	-	43,5	66	23	23	51	M6x20	M6x18	0,061
K0472.52014	20,1	14,1	27	40	33	40	26	60	84	21	33	65	M8x25	M6x18	0,172
K0472.52020	20,1	20,1	33	40	40	-	-	73	99	33	33	78	M8x25	M8x25	0,252
K0472.52514	25,1	14,1	27	40	33	40	26	60	84	21	33	65	M8x25	M6x18	0,154
K0472.52525	25,1	25,1	33	40	40	-	-	73	99	33	33	78	M8x25	M8x25	0,217
K0472.53014	30,1	14,1	27	40	33	40	26	60	84	21	33	65	M8x25	M6x18	0,132
K0472.53030	30,1	30,1	33	40	40	-	-	73	99	33	33	78	M8x25	M8x25	0,173
K0472.54020	40,2	20,2	36	50	40	55	34,5	87	109	33	40	87	M10x30	M8x25	0,265
K0472.54030	40,2	30,1	45	65	65	65	49	98	137	44	44	109	M10x30	M10x30	0,660
K0472.54040	40,17	40,17	45	60	60	-	-	100	137	40	40	110	M10x30	M10x30	0,519
K0472.55030	50,2	30,1	45	65	65	65	49	98	137	44	44	109	M10x35	M10x35	0,538
K0472.55050	50,2	50,2	54	70	70	-	-	118	154	45	45	128	M10x35	M10x35	0,067

Cross clamps, aluminium

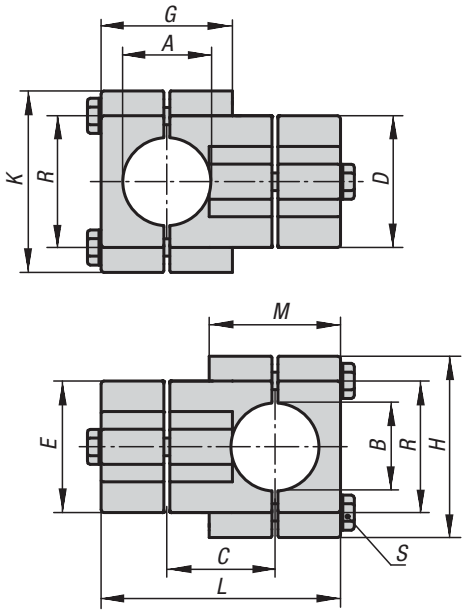



Material, surface finish:
Cast aluminium, vibration ground,
clamping screw with nut in galvanized steel

Sample order:
K0472.523030

On request:
Clamp levers for fixing and further diameters.

Accessory:
- Round and square tubes K0493

KIPP Cross clamps, aluminium

Order No.	A	B	C	D	E	G	H	K	L	M	R	S	Approx. weight kg
K0472.523030	30,2	30,2	38	45	45	44	62	62	83	44	46	M8x45	0,352
K0472.524040	40,2	40,2	50	60	60	60	75	75	110	60	57	M8x60	0,645

Notes

Cross clamp, plastic

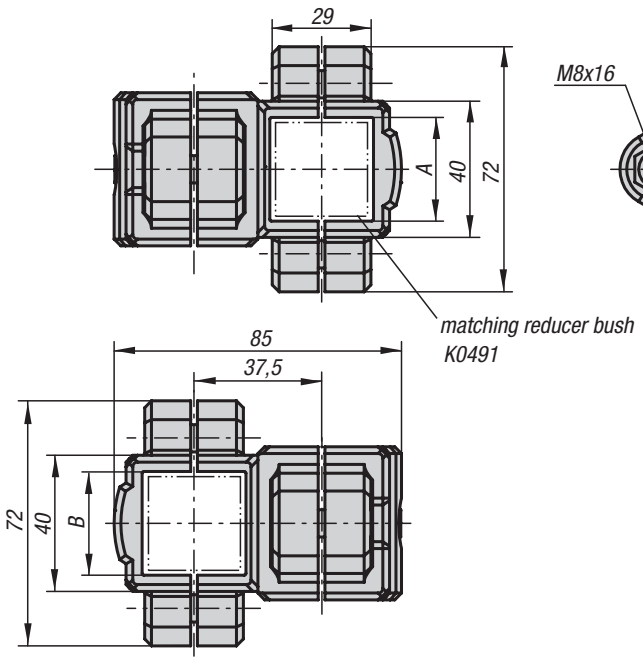



Material, surface finish:
Black thermoplastic; socket head screw to DIN 7984 and hexagon nut to DIN 985 in galvanized steel

Sample order:
K0473.3030

Note:
With the cross clamp square tubes 30 mm can be clamped. If smaller tubes are to be clamped or converted from square to round tubes, these can be adjusted to the required fitting by means of reducing bushes K0491.

On request:
Clamp levers in plastic for fixing.

Accessory:
- Reducing bushes K0491
- Round and square tubes K0493

KIPP Cross clamp, plastic

Order No.	A	B	Approx. weight kg
K0473.3030	30	30	0,171

K0473

Cross clamps, aluminium

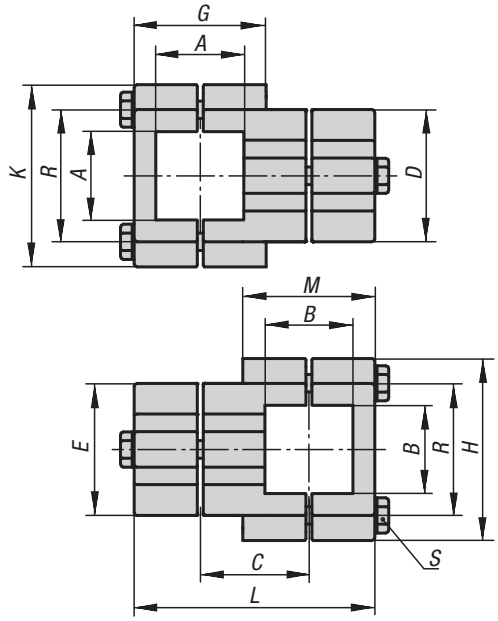



Material, surface finish:
Cast aluminium, vibration ground;
clamping screw with nut in galvanized steel

Sample order:
K0473.523030

On request:
Clamp levers for fixing and further diameters.

Accessory:
- Round and square tubes K0493

KIPP Cross clamps, aluminium

Order No.	A	B	C	D	E	G	H	K	L	M	R	S	Approx. weight kg
K0473.523030	30,2	30,2	38	45	45	44	62	62	83	44	46	M8x45	0,321
K0473.524040	40,3	40,3	50	60	60	60	75	75	110	60	57	M8x60	0,584

Cross clamp, plastic

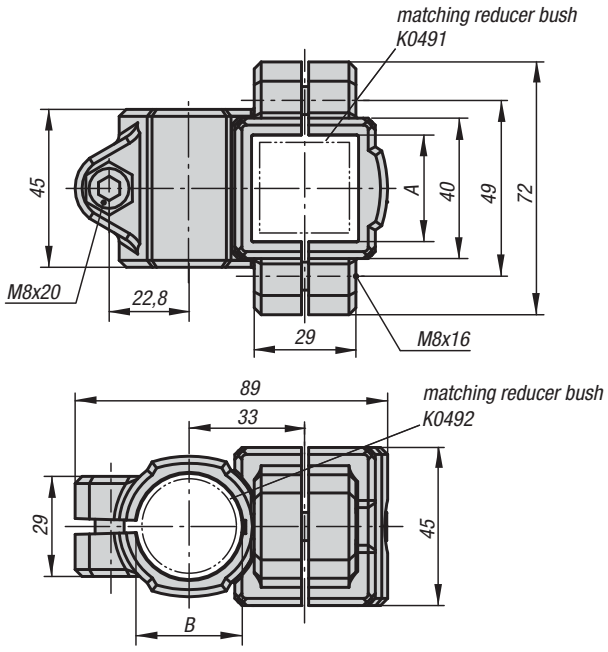



Material, surface finish:
Black thermoplastic; socket head screw to DIN 7984 and hexagon nut to DIN 985 in galvanized steel

Sample order:
K0474.3030

Note:
With the cross clamp square and round tubes 30 mm can be clamped. If smaller tubes are to be clamped or optionally converted from round to square tubes, these can be adjusted to the required fitting by means of reducing bushes K0491 or K0492.

On request:
Clamp levers in plastic for fixing.

Accessory:
- Reducing bushes K0491 and K0492
- Round and square tubes K0493

KIPP Cross clamp, plastic

Order No.	A	B	Approx. weight kg
K0474.3030	30	30	0,117

K0474

Cross clamps, aluminium

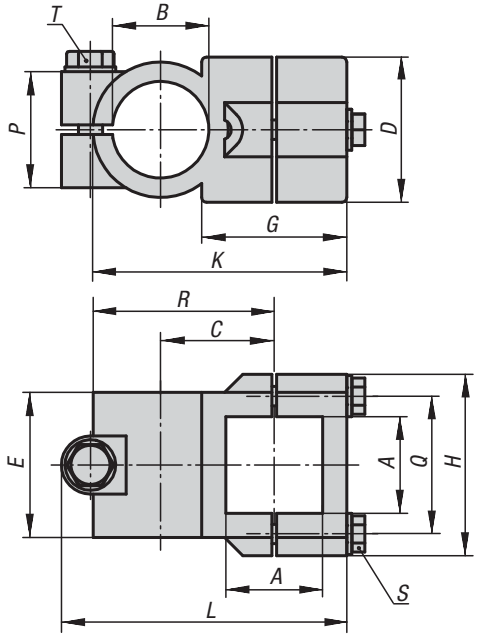



Material, surface finish:
Cast aluminium, vibration ground;
clamping screw with nut in galvanized steel

Sample order:
K0474.53030

On request:
Clamp levers for fixing and further diameters.

Accessory:
- Round and square tubes K0493

KIPP Cross clamps, aluminium

Order No.	A	B	C	D	E	G	H	K	L	P	Q	R	S	T	Approx. weight kg
K0474.53030	30,2	30,1	33	45	45	40	62	74,5	85	33	46	55	M8x35	M8 x 35	0,245
K0474.54040	40,3	40,2	47	60	60	60	75	105	117	48	57	75	M8x45	M10 x 50	0,525

Angle clamps, plastic



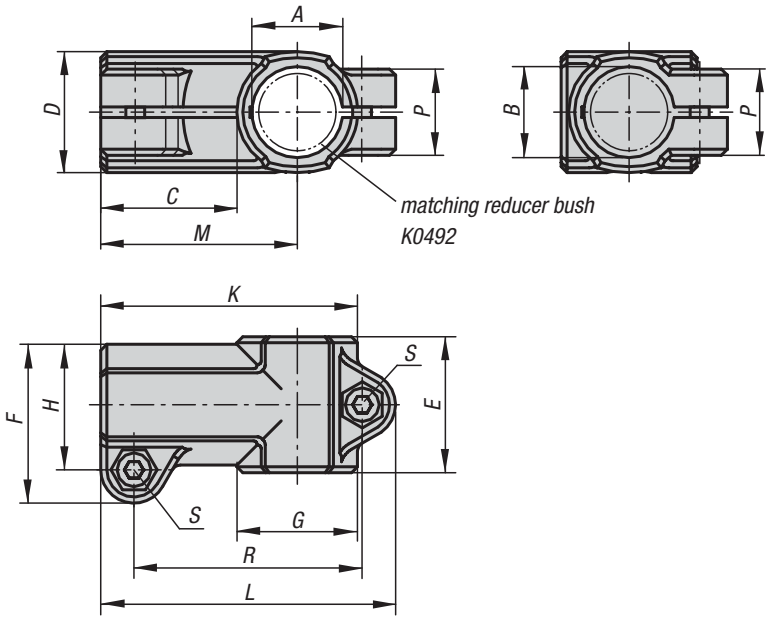

Material, surface finish:
Black thermoplastic; socket head screw to DIN 7984 and hexagon nut to DIN 985 in galvanized steel

Sample order:
K0475.1818

Note:
The basic size for round tubes is Ø18 mm or Ø30 mm. If smaller tubes are to be clamped or converted from round to square tubes, these can be adjusted to the required fitting by means of reducing bushes K0492.

On request:
Clamp levers in plastic for fixing.

Accessory:
- Reducing bushes K0492
- Round and square tubes K0493

KIPP Angle clamps, plastic

Order No.	A	B	C	D	E	F	G	H	K	L	M	P	R	S	Approx. weight kg
K0475.1818	18	18	30,5	25	30	34	25	26,5	55,5	64,5	43	21	49,5	M6x18	0,044
K0475.3030	30	30	45	40	45	52,5	40	41,5	85	97,5	65	28,5	75,5	M8x25	0,115

Angle clamps, aluminium



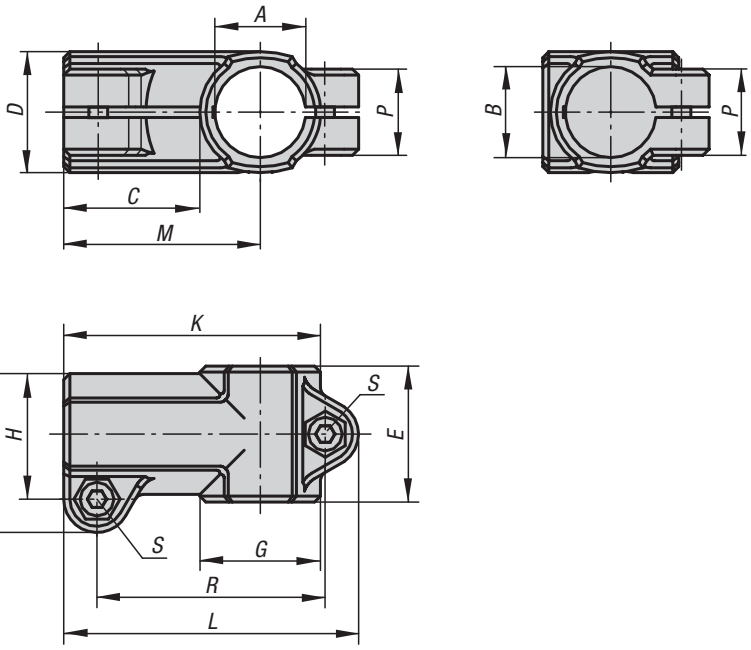

Material, surface finish:
Cast aluminium, vibration ground; socket head screw to DIN 7984 and hexagon nut to DIN 985 in galvanized steel

Sample order:
K0475.51818

On request:
Clamp levers for fixing and further diameters.

Accessory:
- Round and square tubes K0493

KIPP Angle clamps, aluminium

Order No.	A	B	C	D	E	F	G	H	K	L	M	P	R	S	Approx. weight kg
K0475.51212	12,1	12,1	30	26	32	37,5	26	30	56	67,5	43	21	52	M6x20	0,097
K0475.51414	14,1	14,1	30	26	32	37,5	26	30	56	67,5	43	21	52	M6x20	0,090
K0475.51515	15,1	15,1	30	26	32	37,5	26	30	56	67,5	43	21	52	M6x20	0,087
K0475.51616	16,1	16,1	30	26	32	37,5	26	30	56	67,5	43	21	52	M6x20	0,083
K0475.51818	18,1	18,1	30	26	32	37,5	26	30	56	67,5	43	21	52	M6x20	0,075
K0475.52020	20,1	20,1	40	40	45	53	40	42,5	80	93	60	33	72,5	M8x25	0,279
K0475.52525	25,1	25,1	40	40	45	53	40	42,5	80	93	60	33	72,5	M8x25	0,240
K0475.53030	30,1	30,1	40	40	45	53	40	42,5	80	93	60	33	72,5	M8x25	0,193
K0475.54040	40,2	40,2	60	56	60	74	56	60	115	133	88	40	107	M10x30	0,526
K0475.55050	50,22	50,22	63	66	70	85	66	71	131	150	99	45	122	M10x35	0,725

Angle clamp, plastic



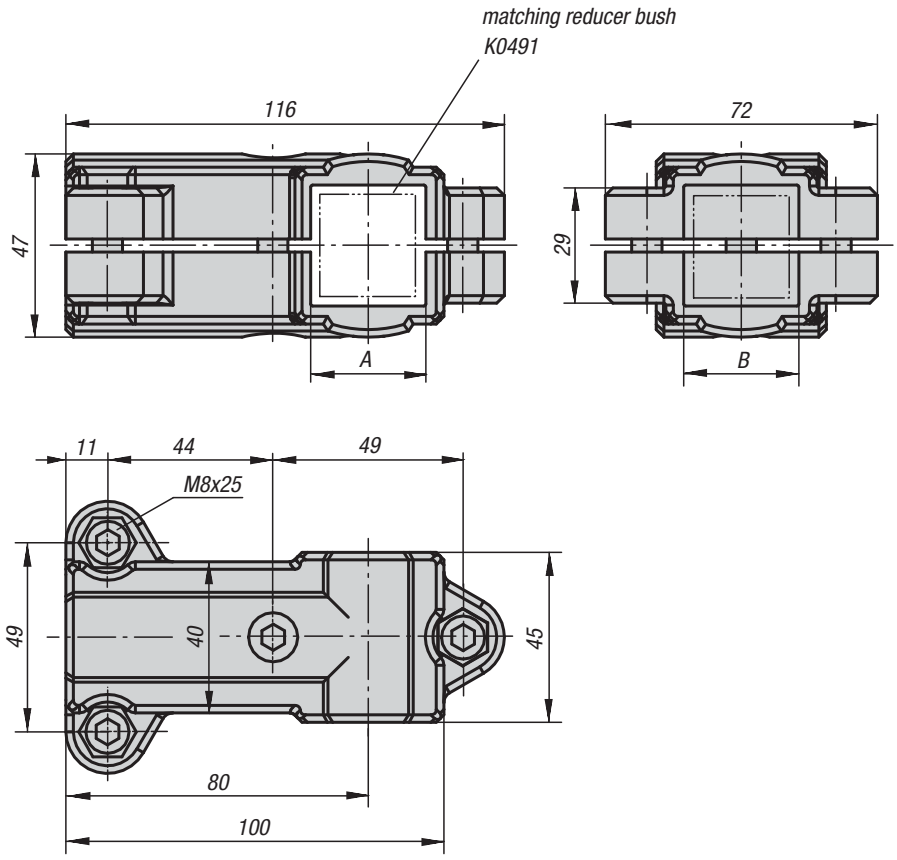

Material, surface finish:
Black thermoplastic; socket head screw to DIN 7984 and hexagon nut to DIN 985 in galvanized steel

Sample order:
K0476.3030

Note:
With the angle clamp square tubes 30 mm can be clamped. If smaller tubes are to be clamped or converted from square to round tubes, these can be adjusted to the required fitting by means of reducing bushes K0491.

On request:
Clamp levers in plastic for fixing.

Accessory:
- Reducing bushes K0491
- Round and square tubes K0493

KIPP Angle clamp, plastic

Order No.	A	B	Approx. weight kg
K0476.3030	30	30	0,194

Angle clamps, aluminium



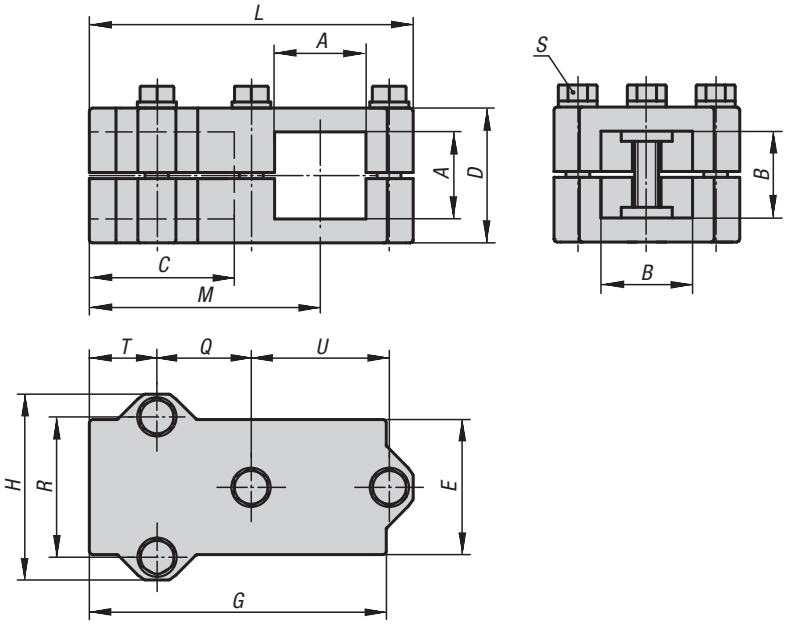

Material, surface finish:
Cast aluminium, vibration ground;
clamping screw with nut in galvanized steel

Sample order:
K0476.523030

On request:
Clamp levers for fixing and further dimensions for square tubes.

Accessory:
- Round and square tubes K0493

KIPP Angle clamps, aluminium

Order No.	A	B	C	D	E	G	H	L	M	Q	R	S	T	U	Approx. weight kg
K0476.523030	30,3	30,3	46	45	45	100	62	108	77	31,5	46	M8x45	23	46	0,361
K0476.524040	40,4	40,4	60	60	60	129	75	136	99	40	57	M8x60	30	57	0,722

Angle clamps, aluminium



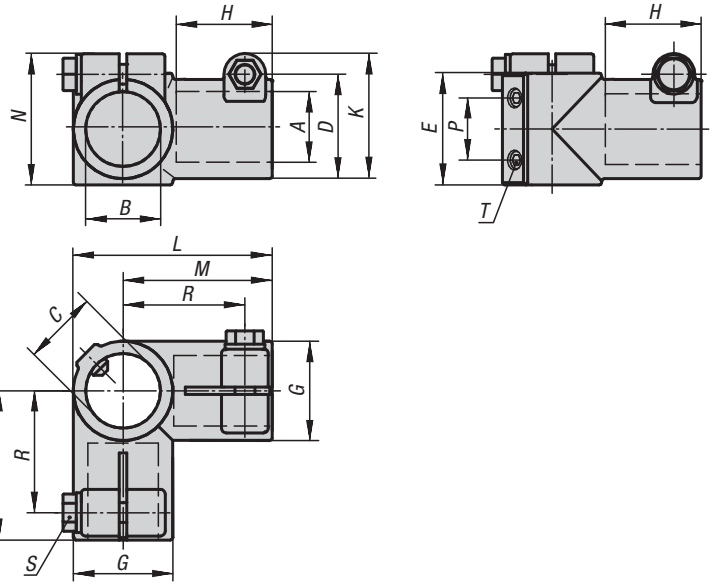

Material, surface finish:
Cast aluminium, vibration ground,
clamping screw with nut in galvanized steel

Sample order:
K0476.530

On request:
Clamp levers for fixing and further diameters.

Accessory:
- Round and square tubes K0493

KIPP Angle clamps, aluminium

Order No.	A	B	C	D	E	G	H	K	L	M	N	P	R	S	T	Approx. weight kg
K0476.530	30,1	30,1	30	40	45	40	35	51	80	60	53	25	49	M8x35	M8x15	0,250
K0476.540	40,2	40,2	40	56	60	56	58	71	116	88	73	35	75	M10x30	M8x10	0,769
K0476.550	50,2	50,2	50,2	66	70	66	70	78	136	108	80	40	90	M10x35	M10x12	0,996

Base clamps, plastic



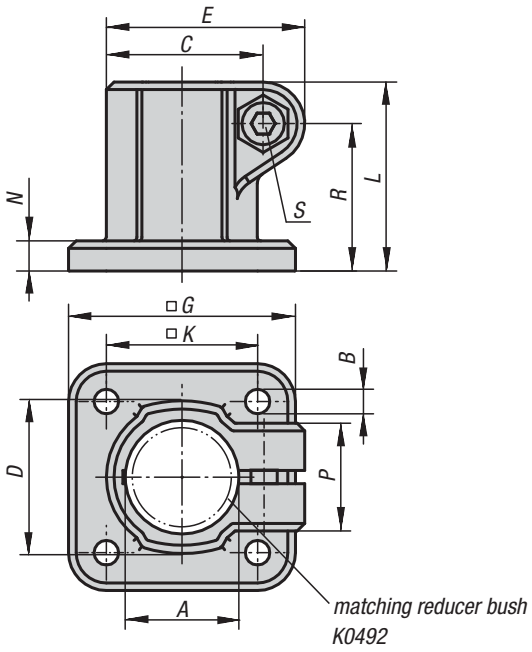

Material, surface finish:
Black thermoplastic; socket head screw to DIN 7984 and hexagon nut to DIN 985 in galvanized steel

Sample order:
K0477.18

Note:
The basic size for round tubes is Ø18 mm or Ø30 mm. If smaller tubes are to be clamped or converted from round to square tubes, these can be adjusted to the required fitting by means of reducing bushes K0492.

On request:
Clamp levers in plastic for fixing.

Accessory:
- Reducing bushes K0492
- Round and square tubes K0493

KIPP Base clamps, plastic

Order No.	A	B	C	D	E	G	K	L	N	P	R	S	Approx. weight kg
K0477.18	18	5,3	26,5	26	34	45	30	32	5	21	24,5	M6x18	0,030
K0477.30	30	6,5	41,5	42	52,5	60	40	50	8	28,5	39	M8x25	0,075

Base clamps, aluminium



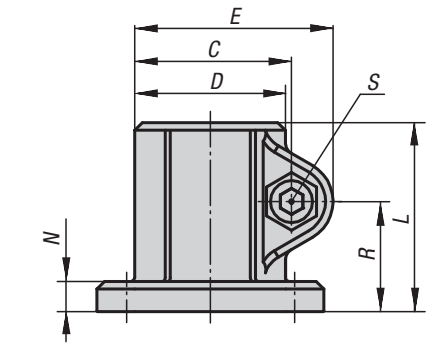

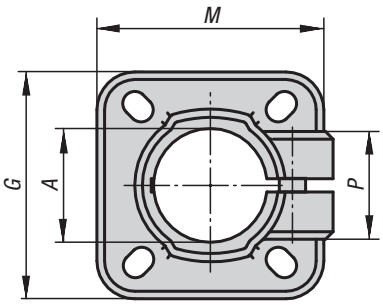

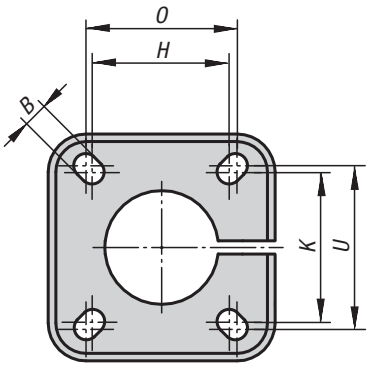

hole arrangement 1

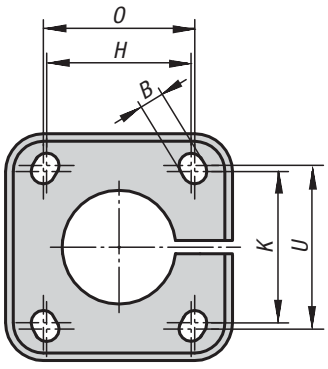

hole arrangement 2

Material, surface finish:
Cast aluminium, vibration ground; socket head screw to DIN 7984 and hexagon nut to DIN 985 in galvanized steel

Sample order:
K0477.518

On request:
Clamp levers for fixing and further diameters.

Accessory:
- Round and square tubes K0493

KIPP Base clamps, aluminium

Order No.	hole arrangement	A	B	C	D	E	G	H	K	L	M	N	O	P	R	S	U	Approx. weight kg
K0477.512	1	12,1	5,5	29,5	25	37,5	42	28	28	37	42	5	30	23	21	M6x20	30	0,064
K0477.514	1	14,1	5,5	29,5	25	37,5	42	28	28	37	42	5	30	23	21	M6x20	30	0,059
K0477.515	1	15,1	5,5	29,5	25	37,5	42	28	28	37	42	5	30	23	21	M6x20	30	0,057
K0477.516	1	16,1	5,5	29,5	25	37,5	42	28	28	37	42	5	30	23	21	M6x20	30	0,057
K0477.518	1	18,1	5,5	29,5	25	37,5	42	28	28	37	42	5	30	23	21	M6x20	30	0,052
K0477.520	2	20,1	6,5	42,5	40	53	60	40	45	50	60	8	42	33	29	M8x25	45	0,193
K0477.525	2	25,1	6,5	42,5	40	53	60	40	45	50	60	8	42	33	29	M8x25	45	0,164
K0477.530	2	30,1	6,5	42,5	40	53	60	40	45	50	60	8	42	33	29	M8x25	45	0,137
K0477.540	1	40,17	8,5	60	56	74	90	60	60	70	90	10	64	40	40	M10x30	64	0,387
K0477.550	1	50,22	10,5	70	66	85	105	74	74	85	105	14	80	45	49,5	M10x35	80	0,603

Base clamp, plastic

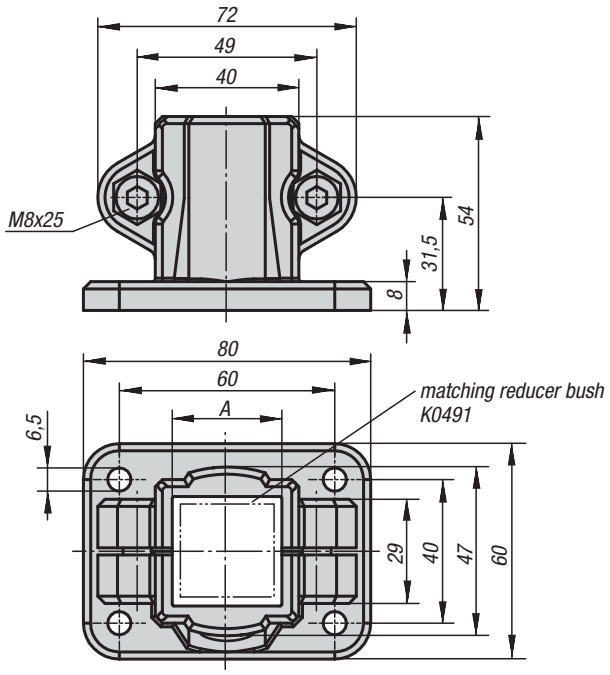



Material, surface finish:
Black thermoplastic; socket head screw to DIN 7984 and hexagon nut to DIN 985 in galvanized steel

Sample order:
K0478.30

Note:
With the base clamp square tubes 30 mm can be clamped. If smaller tubes are to be clamped or converted from square to round tubes, these can be adjusted to the required fitting by means of reducing bushes K0491.

On request:
Clamp levers in plastic for fixing.

Accessory:
- Reducing bushes K0491
- Round and square tubes K0493

KIPP Base clamp, plastic

Order No.	A	Approx. weight kg
K0478.30	30	0,121

K0478

Base clamps, aluminium

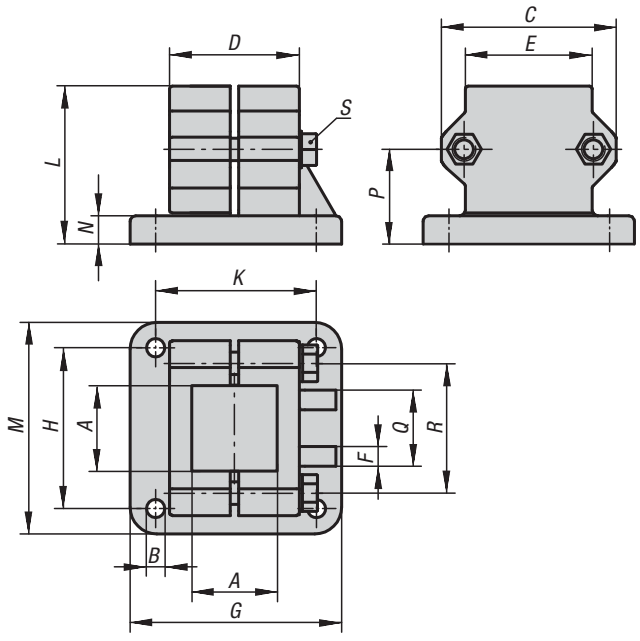



Material, surface finish:
Cast aluminium, vibration ground, clamping screw with nut in galvanized steel

Sample order:
K0478.5230

On request:
Clamp levers for fixing and further dimensions for square tubes.

Accessory:
- Round and square tubes K0493

KIPP Base clamps, aluminium

Order No.	A	B	C	D	E	F	G	H	K	L	M	N	P	Q	R	S	Approx. weight kg
K0478.5230	30,3	6,5	62	45	45	5	75	57	57	56	75	10	33,5	25	46	M8x45	0,278
K0478.5240	40,4	8,5	75	60	60	5	100	76	76	71	100	10	43	25	57	M8x60	0,570

Flange clamps, plastic



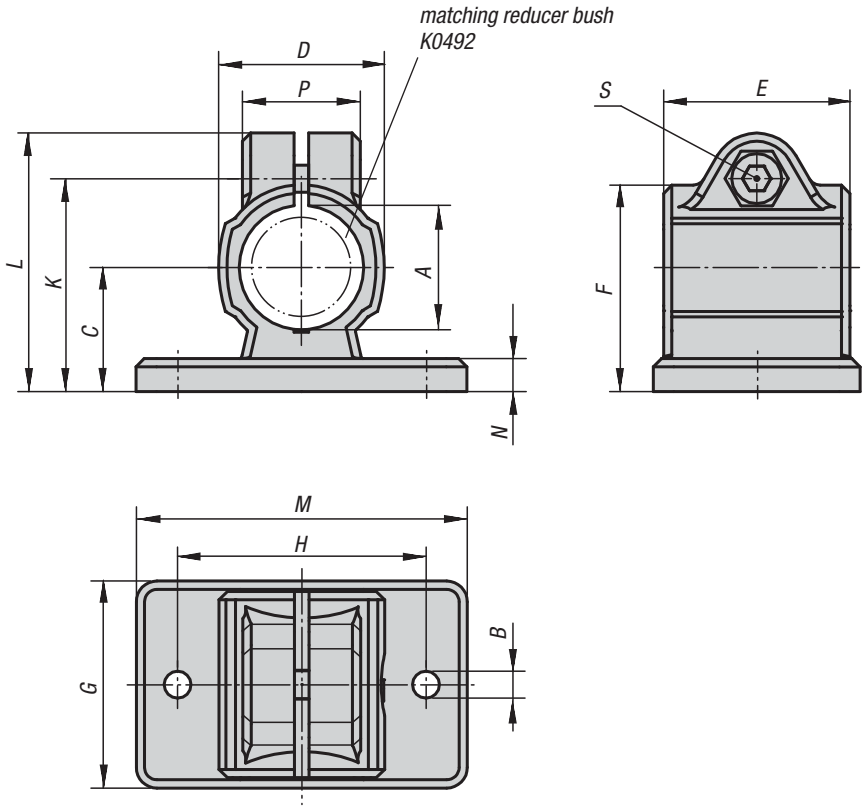

Material, surface finish:
Black thermoplastic; socket head screw to DIN 7984 and hexagon nut to DIN 985 in galvanized steel

Sample order:
K0479.18

Note:
The basic size for round tubes is Ø18 mm or Ø30 mm. If smaller tubes are to be clamped or converted from round to square tubes, these can be adjusted to the required fitting by means of reducing bushes K0492.

On request:
Clamp levers in plastic for fixing.

Accessory:
- Reducing bushes K0492
- Round and square tubes K0493

KIPP Flange clamps, plastic

Order No.	A	B	C	D	E	F	G	H	K	L	M	N	P	S	Approx. weight kg
K0479.18	18	5,3	18	25	30	30,5	35	40	32	39,5	50	5	21	M6x18	0,030
K0479.30	30	6,5	30	40	45	50	50	60	51,5	62,5	80	8	28,5	M8x25	0,084

Flange clamps, aluminium

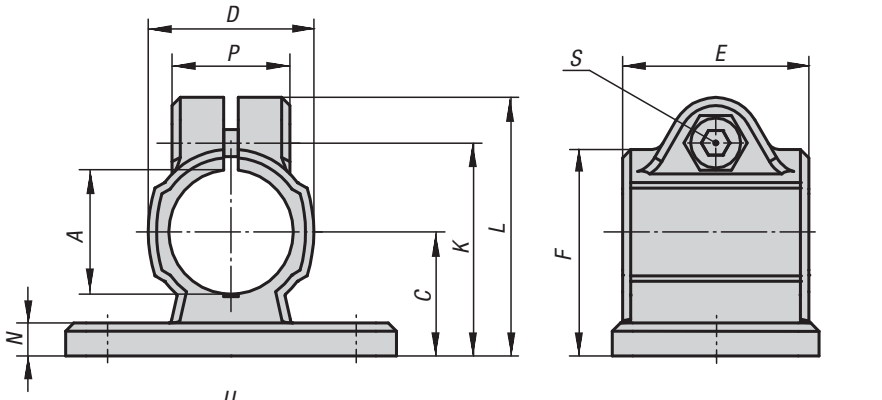

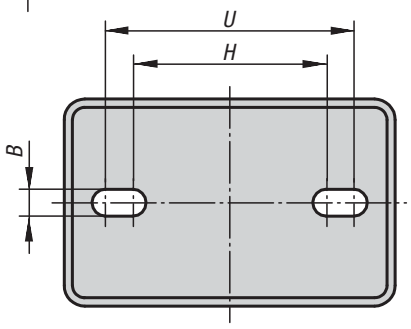

hole arrangement 1

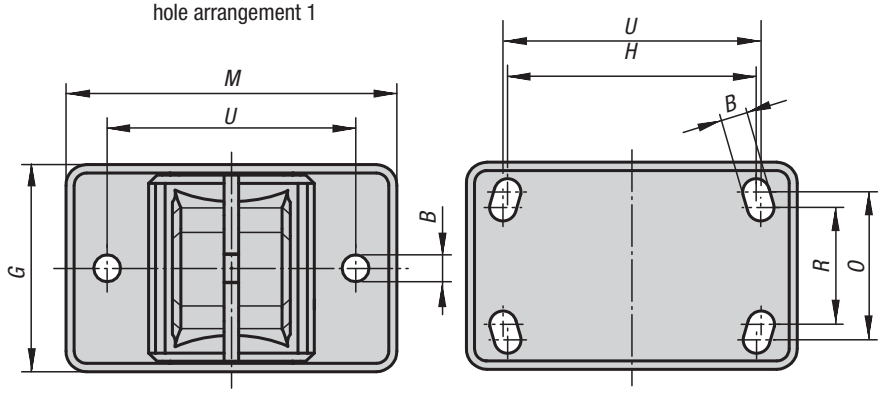

hole arrangement 2

hole arrangement 3



Material, surface finish:
Cast aluminium, vibration ground; socket head screw to DIN 7984 and hexagon nut to DIN 985 in galvanized steel

Sample order:
K0479.518

Note:
* Oblong hole

On request:
Clamp levers for fixing and further diameters.

Accessory:
- Round and square tubes K0493

KIPP Flange clamps, aluminium

Order No.	hole arrangement	A	B	C	D	E	F	G	H	K	L	M	N	O	P	R	S	U	Approx. weight kg
K0479.512	1	12,1	5,5* (2x)	18	26	32	31	35	38	32,5	41	50	5	-	23	-	M6x20	40	0,059
K0479.514	2	14,1	5,5 (2x)	18	26	32	31	35	-	32,5	41	50	5	-	23	-	M6x20	40	0,063
K0479.515	2	15,1	5,5 (2x)	18	26	32	31	35	-	32,5	41	50	5	-	23	-	M6x20	40	0,062
K0479.516	1	16,1	5,5* (2x)	18	26	32	31	35	38	32,5	41	50	5	-	23	-	M6x20	40	0,060
K0479.518	2	18,1	5,5 (2x)	18	26	32	31	35	-	32,5	41	50	5	-	23	-	M6x20	40	0,056
K0479.520	1	20,1	6,5* (2x)	30	40	40	50	55	53	53	63	78	7	-	33	-	M8x25	60	0,197
K0479.525	1	25,1	6,5* (2x)	30	40	40	50	55	53	53	63	78	7	-	33	-	M8x25	60	0,180
K0479.530	1	30,1	6,5* (2x)	30	40	40	50	55	53	53	63	78	7	-	33	-	M8x25	60	0,159
K0479.540	3	40,17	8,5* (4x)	42	56	60	70	80	80	74	87	105	10	60	40	52	M10x30	82	0,397
K0479.550	3	50,17	10,5* (4x)	50	66	65	83	90	98	85	98	128	14	62	45	60	M10x35	100	0,628

Flange clamps, aluminium



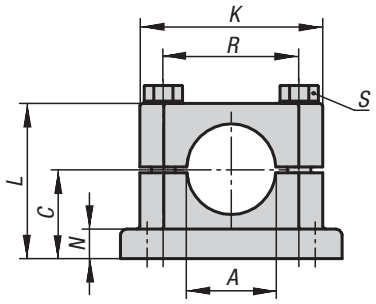

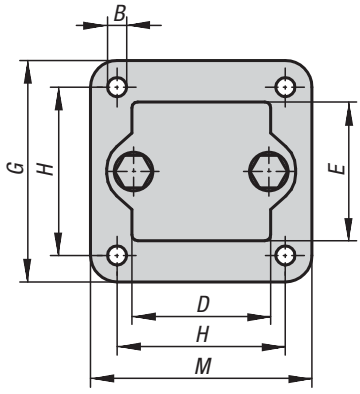

Material, surface finish:
Cast aluminium, vibration ground,
clamping screw with nut in galvanized steel

Sample order:
K0479.5230

On request:
Clamp levers for fixing and further diameters.

Accessory:
- Round and square tubes K0493

KIPP Flange clamps, aluminium

Order No.	A	B	C	D	E	G	H	K	L	M	N	R	S	Approx. weight kg
K0479.5220	20,2	6,5	30	45	45	75	57	62	52,5	75	10	46	M8x50	0,314
K0479.5225	25,2	6,5	30	45	45	75	57	62	52,5	75	10	46	M8x50	0,301
K0479.5230	30,2	6,5	30	45	45	75	57	62	52,5	75	10	46	M8x50	0,285
K0479.5240	40,2	8,5	40	60	60	100	76	75	70	100	10	57	M8x70	0,545

Flange clamp, plastic

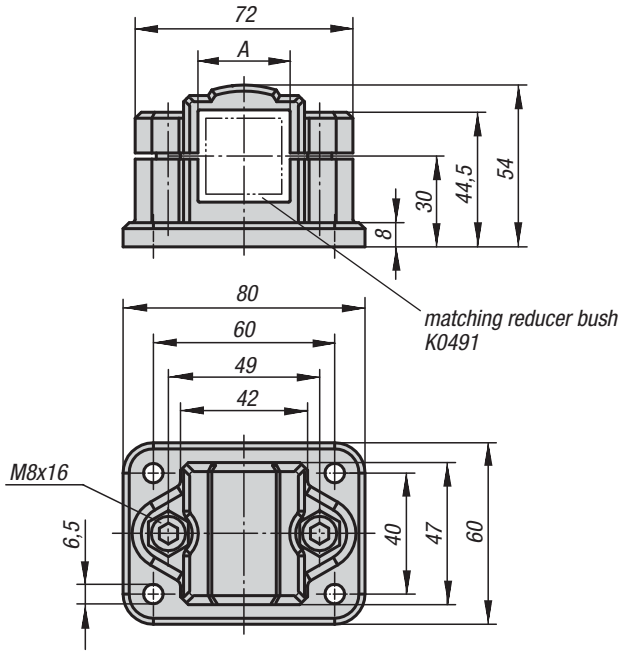



Material, surface finish:
Black thermoplastic; socket head screw to DIN 7984 and hexagon nut to DIN 985 in galvanized steel

Sample order:
K0480.30

Note:
With the flange clamp square tubes 30 mm can be clamped. If smaller tubes are to be clamped or converted from square to round tubes, these can be adjusted to the required fitting by means of reducing bushes K0491.

On request:
Clamp levers in plastic for fixing.

Accessory:
- Reducing bushes K0491
- Round and square tubes K0493

KIPP Flange clamp, plastic

Order No.	A	Approx. weight kg
K0480.30	30	0,125

K0480

Flange clamps, aluminium

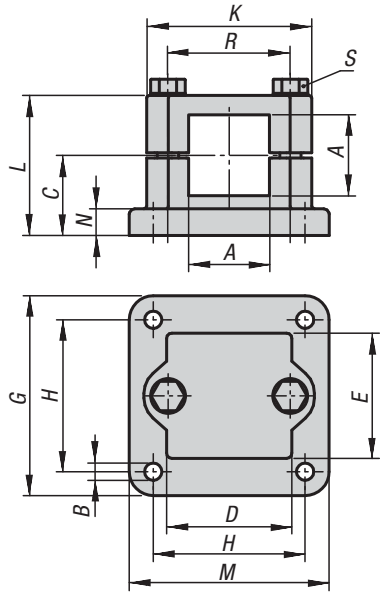



Material, surface finish:
Cast aluminium, vibration ground, clamping screw with nut in galvanized steel

Sample order:
K0480.5230

On request:
Clamp levers for fixing and further dimensions for square tubes available.

Accessory:
- Round and square tubes K0493

KIPP Flange clamps, aluminium

Order No.	A	B	C	D	E	G	H	K	L	M	N	R	S	Approx. weight kg
K0480.5225	25,3	6,5	30	45	45	75	57	62	52,5	75	10	46	M8x50	0,292
K0480.5230	30,3	6,5	30	45	45	75	57	62	52,5	75	10	46	M8x50	0,273
K0480.5240	40,4	8,5	40	60	60	100	76	75	70	100	10	57	M8x70	0,530

K0481

Flange clamp, plastic

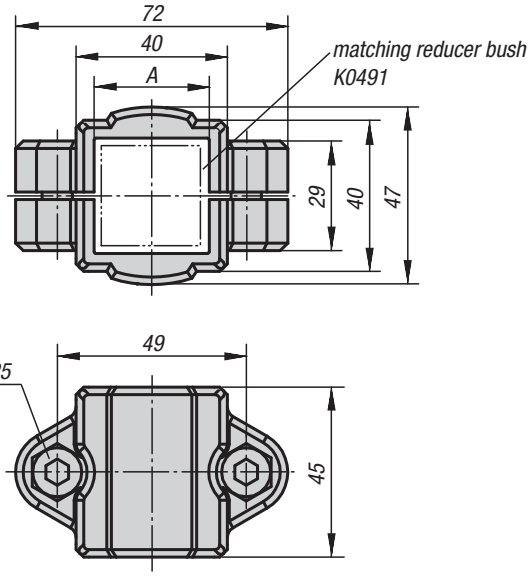



Material, surface finish:
Black thermoplastic; socket head screw to DIN 7984 and hexagon nut to DIN 985 in galvanized steel

Sample order:
K0481.30

Note:
With the flange clamp square tubes 30 mm can be clamped. If smaller tubes are to be clamped or converted from square to round tubes, these can be adjusted to the required fitting by means of reducing bushes K0491.

On request:
Clamp levers in plastic for fixing.

Accessory:
- Reducing bushes K0491
- Round and square tubes K0493

KIPP Flange clamp, plastic

Order No.	A	Approx. weight kg
K0481.30	30	0,090

K0483

Sleeve clamps, plastic

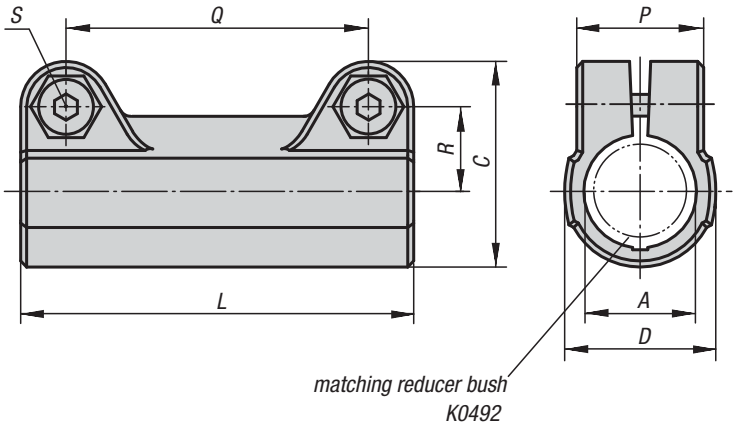



Material, surface finish:
Black thermoplastic; socket head screw to DIN 7984 and hexagon nut to DIN 985 in galvanized steel

Sample order:
K0483.18

Note:
The basic size for round tubes is Ø18 mm or Ø30 mm. If smaller tubes are to be clamped or converted from round to square tubes, these can be adjusted to the required fitting by means of reducing bushes K0492.

On request:
Clamp levers in plastic for fixing.

Accessory:
- Reducing bushes K0492
- Round and square tubes K0493

KIPP Sleeve clamps, plastic

Order No.	A	C	D	L	P	Q	R	S	Approx. weight kg
K0483.18	18	34	25	65	21	50	14	M6x18	0,028
K0483.30	30	52,5	40	95	28,5	73	22,8	M8x25	0,087

Strap clamps

with internal toothing, plastic



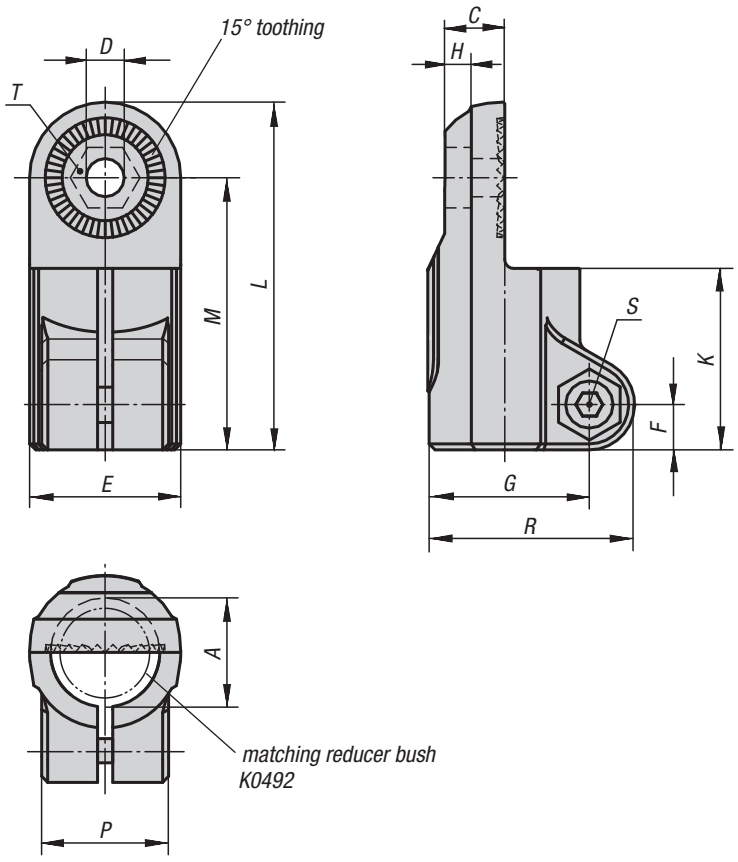

Material, surface finish:
Black thermoplastic. Socket head screw according to DIN 7984 and hexagon nut to DIN 985 in galvanized steel

Sample order:
K0484.18

Note:
Strap clamps with internal toothing can be combined with strap clamps with external toothing (K0485) to make a joint clamp.
The basic size for round tubes is Ø18 mm or Ø30 mm. If smaller tubes are to be clamped or converted from round to square tubes, these can be adjusted to the required fitting by means of reducing bushes K0492.

On request:
Clamp levers in plastic for fixing.

Accessory:
- Reducing bushes K0492
- Round and square tubes K0493

KIPP Strap clamps with internal toothing, plastic

Order No.	A	C	D	E	F	G	H	K	L	M	P	R	S	T	Approx. weight kg
K0484.18	18	9,9	6,1	25	7,5	26,5	5,9	30	57,5	45	21	34	M6x18	M6-DIN 985	0,028
K0484.30	30	16,5	8,1	40	11	41,5	6,5	45	88	68	28,5	52,5	M8x25	M8-DIN 985	0,086

Strap clamps

with external toothing, plastic



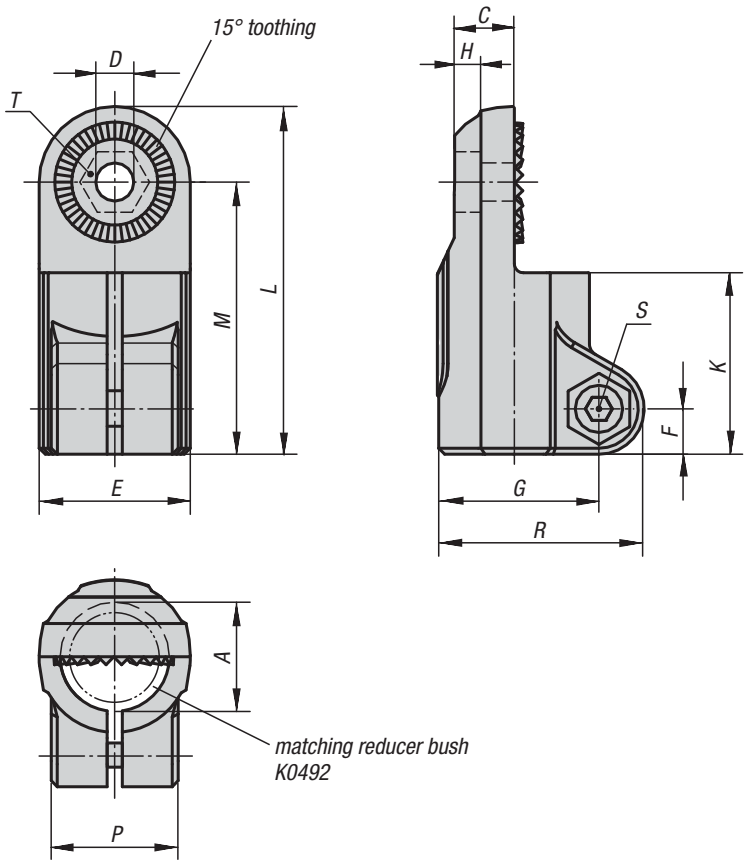

Material, surface finish:
Black thermoplastic; socket head screw to DIN 7984 and hexagon nut to DIN 985 in galvanized steel

Sample order:
K0485.18

Note:
Strap clamps with external toothing can be combined with strap clamps with internal toothing (K0484, K0486 or K0487) to make a joint clamp.
The basic size for round tubes is Ø18 mm or Ø30 mm. If smaller tubes are to be clamped or converted from round to square tubes, these can be adjusted to the required fitting by means of reducing bushes K0492.

On request:
Clamp levers in plastic for fixing.

Accessory:
- Reducing bushes K0492
- Round and square tubes K0493

KIPP Strap clamps with external toothing, plastic

Order No.	A	C	D	E	F	G	H	K	L	M	P	R	S	T	Approx. weight kg
K0485.18	18	9,9	6,1	25	7,5	26,5	5,9	30	57,5	45	21	34	M6x18	M6-DIN 985	0,028
K0485.30	30	16,5	8,1	40	11	41,5	6,5	45	88	68	28,5	52,5	M8x25	M8-DIN 985	0,087

Strap clamps

with internal toothing, plastic



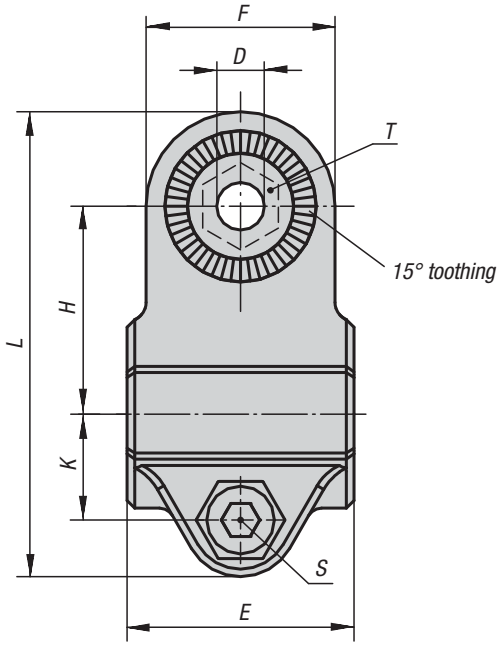

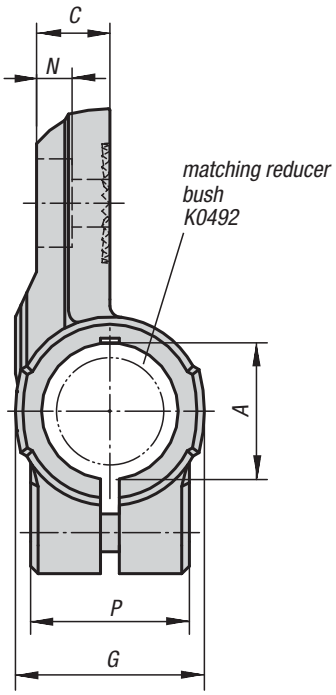

Material, surface finish:
Black thermoplastic; socket head screw to DIN 7984 and hexagon nut to DIN 985 in galvanized steel

Sample order:
K0486.18

Note:
Strap clamps with internal toothing can be combined with strap clamps with external toothing (K0485) to make a joint clamp.
The basic size for round tubes is Ø18 mm or Ø30 mm. If smaller tubes are to be clamped or converted from round to square tubes, these can be adjusted to the required fitting by means of reducing bushes K0492.

On request:
Clamp levers in plastic for fixing.

Accessory:
- Reducing bushes K0492
- Round and square tubes K0493

KIPP Strap clamps with internal toothing, plastic

Order No.	A	C	D	E	F	G	H	K	L	N	P	S	T	Approx. weight kg
K0486.18	18	9,7	6,1	30	25	25	27,5	14	61,5	5,7	21	M6x18	M6-DIN 985	0,029
K0486.30	30	16,5	8,1	45	40	40	43	22,5	95,5	6,5	28,5	M8x25	M8-DIN 985	0,091

Strap clamps

with internal toothing, plastic



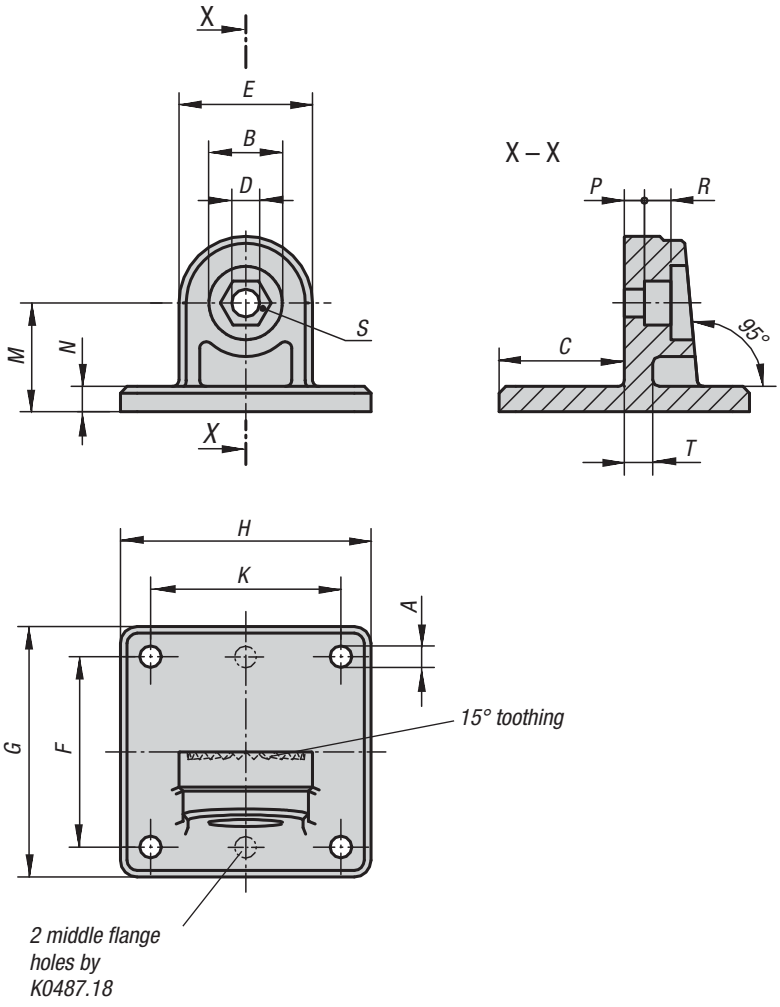

Material, surface finish:
Black thermoplastic; socket head screw to DIN 7984 and hexagon nut to DIN 985 in galvanized steel

Sample order:
K0487.18

Note:
Strap clamps with internal toothing can be combined with strap clamps with external toothing (K0485) to make a joint clamp.

On request:
Clamp levers in plastic for fixing.

KIPP Strap clamps with internal toothing, plastic

Order No.	A	B	C	D	E	F	G	H	K	M	N	P	R	S	T	Approx. weight kg
K0487.18	5,3 (2x)	15	25	6,1	25	40	50	35	-	20	5	4,5	5,5	M6-DIN 985	5	0,017
K0487.30	6,5 (4x)	22	37,5	8,1	40	60	75	75	60	32,5	7,5	6,6	8,2	M8-DIN 985	7	0,077

Joint clamps

without toothing, plastic



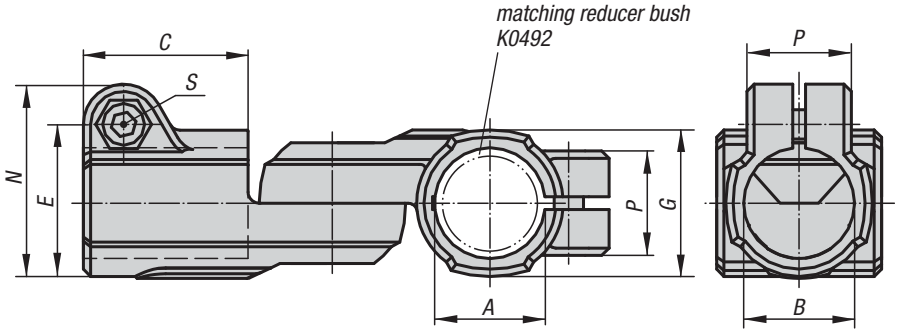

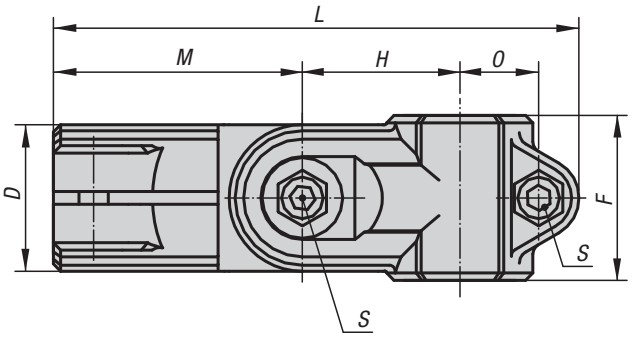

Material, surface finish:
Black thermoplastic; socket head screw to DIN 7984 and hexagon nut to DIN 985 in galvanized steel

Sample order:
K0488.18

Note:
Joint clamps can be continuously shifted by 180°. The basic size for round tubes is Ø18 mm or Ø30 mm. If smaller tubes are to be clamped or converted from round to square tubes, these can be adjusted to the required fitting by means of reducing bushes K0492.

On request:
Clamp levers in plastic for fixing.

Accessory:
- Reducing bushes K0492
- Round and square tubes K0493

KIPP Joint clamps without toothing, plastic

Order No.	A	B	C	D	E	F	G	H	L	M	N	O	P	S	Approx. weight kg
K0488.18	18	18	30	25	26,5	30	25	27,5	94	45	34	14	21	M6x18	0,067
K0488.30	30	30	45	40	41,5	45	40	43	143,5	68	52,5	22,5	28,5	M8x25	0,160

Joint clamps

without toothing, aluminium



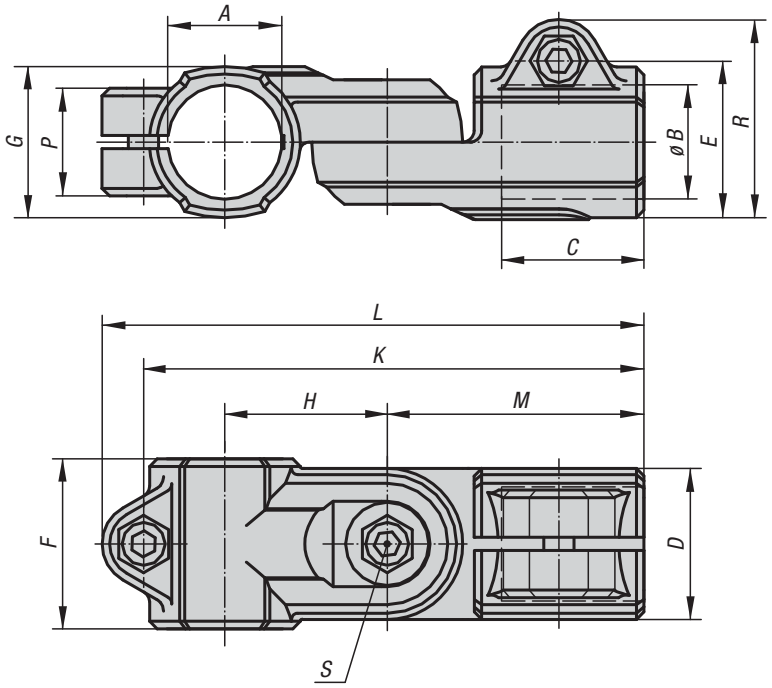

Material, surface finish:
Cast aluminium, vibration ground; socket head screw to DIN 7984 and hexagon nut to DIN 985 in galvanized steel

Sample order:
K0488.518

Note:
Joint clamps can be continuously shifted by 180°.

On request:
Clamp levers for fixing and further diameters.

Accessory:
- Round and square tubes K0493

KIPP Joint clamps without toothing, aluminium

Order No.	A	B	C	D	E	F	G	H	K	L	M	P	R	S	Approx. weight kg
K0488.512	12,1	12,1	25	26	29,4	30	26	27	84	95,5	44	21	37,5	M6x16	0,126
K0488.514	14,1	14,1	25	26	29,4	30	26	27	84	95,5	44	21	37,5	M6x16	0,120
K0488.516	16,1	16,1	25	26	29,4	30	26	27	84	95,5	44	21	37,5	M6x16	0,114
K0488.518	18,1	18,1	25	26	29,4	30	26	27	84	95,5	44	21	37,5	M6x16	0,106
K0488.520	20,1	20,1	45	40	40	-	40	43	136	146	73	33	51	M8x35	0,385
K0488.525	25,1	25,1	45	40	40	-	40	43	136	146	73	33	51	M8x35	0,346
K0488.530	30,1	30,1	45	40	40	-	40	43	136	146	73	33	51	M8x35	0,300
K0488.540	40,2	40,2	60	56	56	-	56	60	188	200	100	48	70	M10x50	0,820

Joint clamps

without toothing, plastic



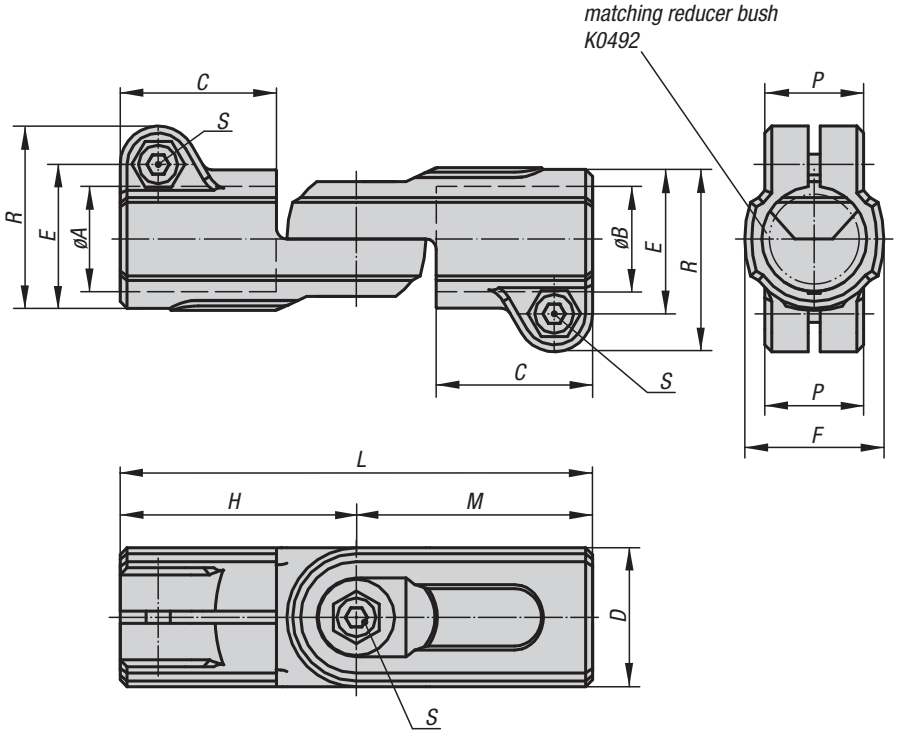

Material, surface finish:
Black thermoplastic; socket head screw to DIN 7984 and hexagon nut to DIN 985 in galvanized steel

Sample order:
K0489.18

Note:
Joint clamps can be continuously shifted by 180°. The basic size for round tubes is Ø18 mm or Ø30 mm. If smaller tubes are to be clamped or converted from round to square tubes, these can be adjusted to the required fitting by means of reducing bushes K0492.

On request:
Clamp levers in plastic for fixing.

Accessory:
- Reducing bushes K0492
- Round and square tubes K0493

KIPP Joint clamps without toothing, plastic

Order No.	A	B	C	D	E	F	H	L	M	P	R	S	Approx. weight kg
K0489.18	18	18	30	25	26,5	25	45	90	45	21	34	M6x18	0,052
K0489.30	30	30	45	40	41,5	40	68	136	68	28,5	52,5	M8x25	0,155

Joint clamps

without toothing, aluminium



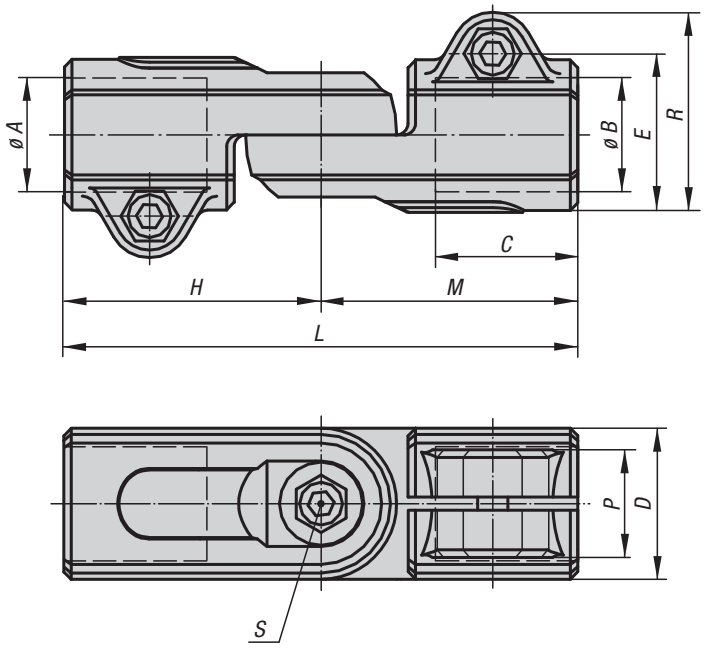

Material, surface finish:
Cast aluminium, vibration ground; socket head screw to DIN 7984 and hexagon nut to DIN 985 in galvanized steel

Sample order:
K0489.540

Note:
Joint clamps can be continuously shifted by 180°.

On request:
Clamp levers for fixing and further diameters.

Accessory:
- Round and square tubes K0493

KIPP Joint Clamps without toothing, aluminium

Order No.	A	B	C	D	E	H	L	M	P	R	S	Approx. weight kg
K0489.512	12,1	12,1	25	26	29,4	44	88	44	21	37,5	M6x16	0,126
K0489.514	14,1	14,1	25	26	29,4	44	88	44	21	37,5	M6x16	0,119
K0489.516	16,1	16,1	25	26	29,4	44	88	44	21	37,5	M6x16	0,123
K0489.518	18,1	18,1	25	26	29,4	44	88	44	21	37,5	M6x16	0,104
K0489.520	20	20	45	40	40	73	146	73	33	51	M8x35	0,408
K0489.525	25,1	25,1	45	40	40	73	146	73	33	51	M8x35	0,374
K0489.530	30,1	30,1	43	40	40	73	146	73	33	51	M8x35	0,317
K0489.540	40,15	40,15	59	56	58	100	200	100	48	70	M10x50	0,863

Joint clamps

without toothing, plastic



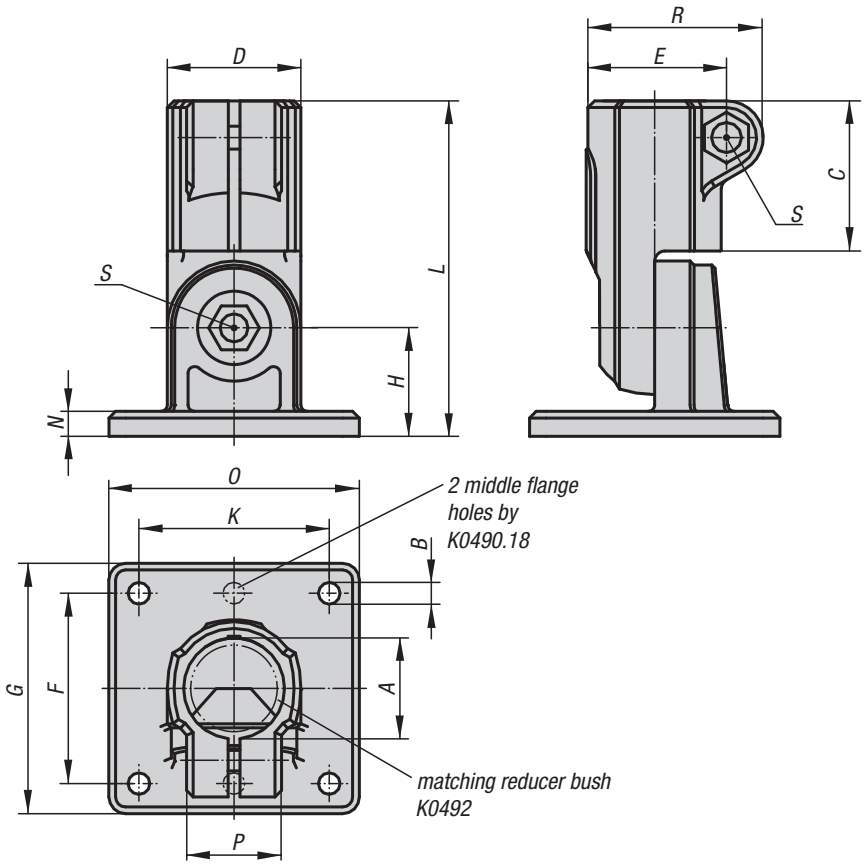

Material, surface finish:
Black thermoplastic; socket head screw to DIN 7984 and hexagon nut to DIN 985 in galvanized steel

Sample order:
K0490.18

Note:
Joint clamps can be continuously shifted by 180°. The basic size for round tubes is Ø18 mm or Ø30 mm. If smaller tubes are to be clamped or converted from round to square tubes, these can be adjusted to the required fitting by means of reducing bushes K0492.

On request:
Clamp levers in plastic for fixing.

Accessory:
- Reducing bushes K0492
- Round and square tubes K0493

KIPP Joint clamps without toothing, plastic

Order No.	A	B	C	D	E	F	G	H	K	L	N	O	P	R	S	Approx. weight kg
K0490.18	18	5,3 (2x)	30	25	26,5	40	50	20	-	65	5	35	21	34	M6x18	0,055
K0490.30	30	6,5 (4x)	45	40	41,5	60	75	32,5	60	100,5	7,5	75	28,5	52,5	M8x25	0,154

Joint clamps

without toothing, aluminium



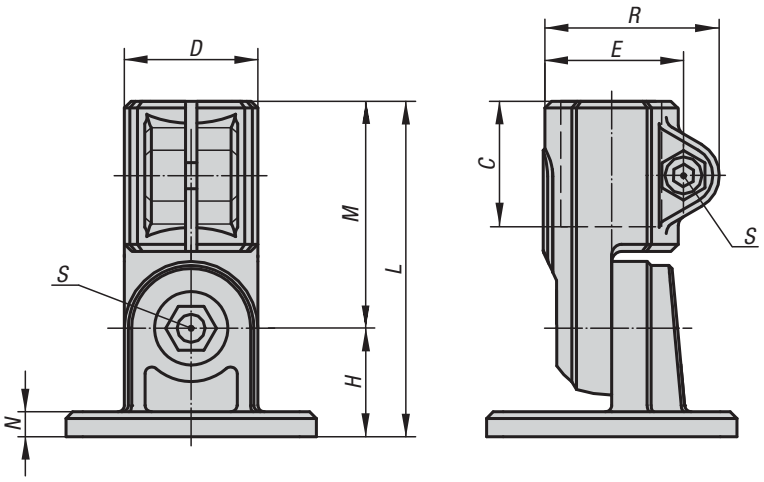

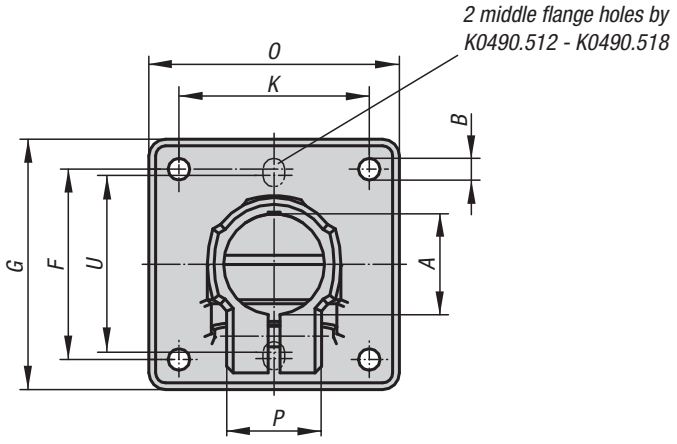

Material, surface finish:
Cast aluminium, vibration ground; socket head screw to DIN 7984 and hexagon nut to DIN 985 in galvanized steel

Sample order:
K0490.518

Note:
Joint clamps can be continuously shifted by 180°.

* Oblong hole

On request:
Clamp levers for fixing and further diameters.

Accessory:
- Round and square tubes K0493

KIPP Joint clamps without toothing, aluminium

Order No.	A	B	C	D	E	F	G	H	K	L	M	N	O	P	R	S	U	Approx. weight kg
K0490.512	12,1	5,3* (2x)	25	26	29,4	40	50	20	-	64	44	5	35	21	37,5	M6x16	38	0,101
K0490.514	14,1	5,3* (2x)	25	26	29,4	40	50	20	-	64	44	5	35	21	37,5	M6x16	38	0,098
K0490.516	16,1	5,3* (2x)	25	26	29,4	40	50	20	-	64	44	5	35	21	37,5	M6x16	38	0,095
K0490.518	18,1	5,3* (2x)	25	26	29,4	40	50	20	-	64	44	5	35	21	37,5	M6x16	38	0,091
K0490.520	20	6,5 (4x)	45	40	40	57	75	33	57	106	73	7	75	33	51	M8x35	-	0,383
K0490.525	25,1	6,5 (4x)	45	40	40	57	75	33	57	106	73	7	75	33	51	M8x35	-	0,374
K0490.530	30,1	6,5 (4x)	45	40	40	57	75	33	57	106	73	7	75	33	51	M8x35	-	0,325
K0490.540	40,2	8,5 (4x)	60	56	56	76	100	44	76	144	100	10	100	48	68	M10x50	-	0,838

K0491

Reducing bushes

square

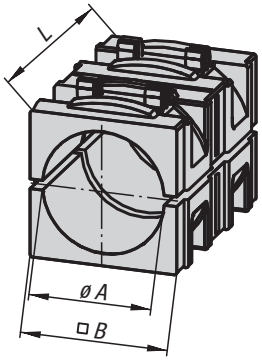

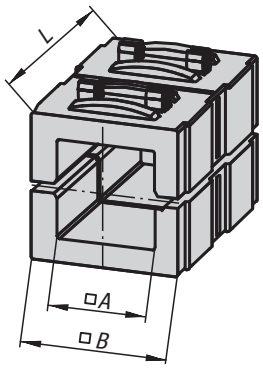



Material, surface finish:
Black thermoplastic

Sample order:
K0491.03020

Note:
With the use of reducing bushes, smaller tubes can be clamped or converted from square tubes to round ones.

KIPP Reducing bushes, square

Order No.	Surface finish	A	B	L
K0491.03020	for round tubes	Ø 20,25	30,3	45
K0491.03025	for round tubes	Ø 25,25	30,3	45
K0491.03030	for round tubes	Ø 30,25	30,3	45
K0491.13020	for square tubes	20,5	30,3	45
K0491.13025	for square tubes	25,5	30,3	45

K0492

Reducing bushes

round

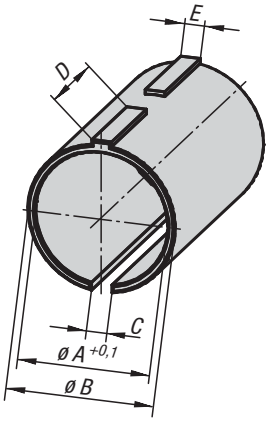

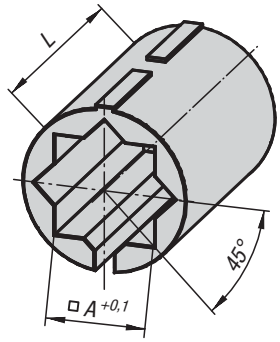



Material, surface finish:
Black thermoplastic

Sample order:
K0492.03020

Note:
With the use of reducing bushes, smaller tubes can be clamped or converted from round tubes to square ones.

KIPP Reducing bushes, round

Order No.	Surface finish	A	B	C	D	E	L
K0492.01812	for round tubes	12,25	18	2,5	11,9	2,4	30
K0492.01814	for round tubes	14,25	18	2,5	11,9	2,4	30
K0492.01815	for round tubes	15,25	18	2,5	11,9	2,4	30
K0492.01816	for round tubes	16,25	18	2,5	11,9	2,4	30
K0492.03020	for round tubes	20,25	30	3,5	18,9	3,4	45
K0492.03025	for round tubes	25,25	30	3,5	18,9	3,4	45
K0492.11810	for square tubes	10,25	18	2,5	11,9	2,4	30
K0492.13020	for square tubes	20,25	30	3,5	18,9	3,4	45

Round and square tubes



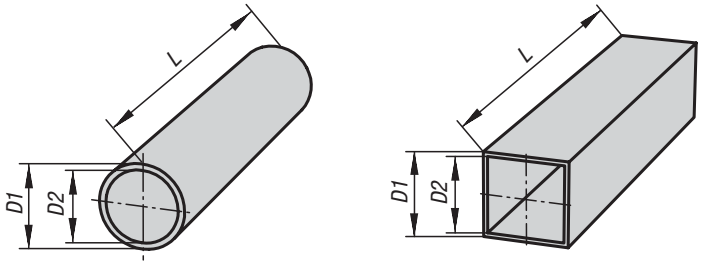

Material, surface finish:
Galvanized steel 1.0037;
aluminium EN AW-6060, light anodized

Sample order:
K0493.0112X500 (please also indicate dimension L)

Note:
The manufacturing tolerances of the round and square tubes are dependent on the specific tube fixing system.

* Aluminium bar

On request:
- stainless steel tubes
- aluminium tubes, black anodized
- customer specific shapes

KIPP Round tubes

Order No.	Surface finish	Material	Description	D1	D2	L
K0493.0112X	round tubes	steel	Ø12 x 1,5	12 ±0,1	9	500/1000/2000
K0493.0114X	round tubes	steel	Ø14 x 1,5	14 ±0,1	11	500/1000/2000
K0493.0115X	round tubes	steel	Ø15 x 1,5	15 ±0,1	12	500/1000/2000
K0493.0116X	round tubes	steel	Ø16 x 1,5	16 ±0,1	13	500/1000/2000
K0493.0118X	round tubes	steel	Ø18 x 1,5	18 ±0,1	15	500/1000/2000
K0493.0120X	round tubes	steel	Ø20 x 2	20 ±0,1	16	500/1000/2000
K0493.0125X	round tubes	steel	Ø25 x 2	25 ±0,1	21	500/1000/2000
K0493.0130X	round tubes	steel	Ø30 x 2	30 ±0,1	26	500/1000/2000
K0493.0140X	round tubes	steel	Ø40 x 4	40 ±0,15	32	500/1000/2000
K0493.0150X	round tubes	steel	Ø50 x 4	50 ±0,2	42	500/1000/2000
K0493.0220X	round tubes	aluminium	Ø20 x 3	20	14	500/1000/2000
K0493.0225X	round tubes	aluminium	Ø25 x 2	25	21	500/1000/2000
K0493.0230X	round tubes	aluminium	Ø30 x 2	30 ±0,1	26	500/1000/2000
K0493.0240X	round tubes	aluminium	Ø40 x 3	40 ±0,15	34	500/1000/2000
K0493.0250X	round tubes	aluminium	Ø50 x 3	50 ±0,2	44	500/1000/2000

KIPP Square tubes

Order No.	Surface finish	Material	Description	D1	D2	L
K0493.4120X	square tubes	steel	20 x 20 x 1	20 ±0,3	18	500/1000/2000
K0493.4125X	square tubes	steel	25 x 25 x 1,5	25 ±0,3	22	500/1000/2000
K0493.4130X	square tubes	steel	30 x 30 x 2	30 ±0,3	26	500/1000/2000
K0493.4140X	square tubes	steel	40 x 40 x 3	40 ±0,4	34	500/1000/2000
K0493.4210X	square tubes	aluminium	10 x 10	10*	-	500/1000/2000
K0493.4220X	square tubes	aluminium	20 x 20 x 1,5	20 ±0,2	17	500/1000/2000
K0493.4230X	square tubes	aluminium	30 x 30 x 2	30 ±0,2	26	500/1000/2000
K0493.4240X	square tubes	aluminium	40 x 40 x 4	40 ±0,3	32	500/1000/2000

Tube stoppers



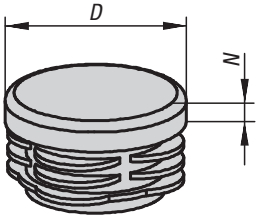

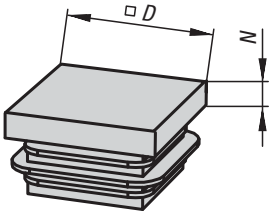

Material, surface finish:
Black thermoplastic

Sample order:
K0494.025200

Note:
Tube stoppers are used as edge protectors or for the closure of tube ends. Mounting can be by pushing them in by hand or by knocking them in with a soft-face hammer.

KIPP Tube stoppers

Order No.	Surface finish	D	N	Suitable for
K0494.018150	for round tubes	18	5	Ø18 x 1,5
K0494.020200	for round tubes	20	5	Ø20 x 2
K0494.025200	for round tubes	25	5	Ø25 x 2
K0494.030200	for round tubes	30	5	Ø30 x 2
K0494.040300	for round tubes	40	5	Ø40 x 3
K0494.040400	for round tubes	40	5	Ø40 x 4
K0494.050400	for round tubes	50	5	Ø50 x 3 / Ø50 x 4
K0494.420100	for square tubes	20	5	20 x 20 x 1
K0494.425150	for square tubes	25	5	25 x 25 x 1,5
K0494.430200	for square tubes	30	5	30 x 30 x 2
K0494.440300	for square tubes	40	5	40 x 40 x 3
K0494.440400	for square tubes	40	5	40 x 40 x 4

Technical information on the tubular linear unit

The tubular linear unit is efficient, economical and universally applicable. High rigidity, low deflection, high loads and easy handling are ideally combined in the linear unit. Four sizes of linear units are available for different applications and loads (guide tubes from Ø18 mm to Ø50 mm).

Features:
– Travel of more than 2000 mm possible
– Position accuracy up to ±0.2 mm / 300 mm
– Travelling speed up to 1.5 m/min
– Driven by ACME threaded spindle
– Installation as desired

Technical description:
A threaded spindle with follower nut in the guide tube converts a rotating movement into a linear movement of the carriage. This is protected against torsion by a carrier wedge.

Fixation of the linear unit:
Depending on the mounting position and application, the linear unit can be attached using fastening elements. The clamping elements of the tubular connection system are available for this.

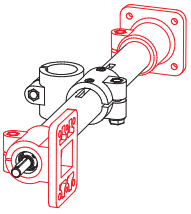

Speed:

n = required spindle r.p.m.

max. spindle rpm with:
plain bearing 80 rpm.
ball bearing 250 rpm.

Type E	Pitch mm
18	2
30	3
40	4
50	4

$$n\ [r.p.m.] = \frac{\text{Speed [m/min] x 1000[mm]}}{\text{Spindle pitch [mm]}}$$

Load data*:
F force [N]
M moment [Nm]
I geom. moment of inertia [cm4]

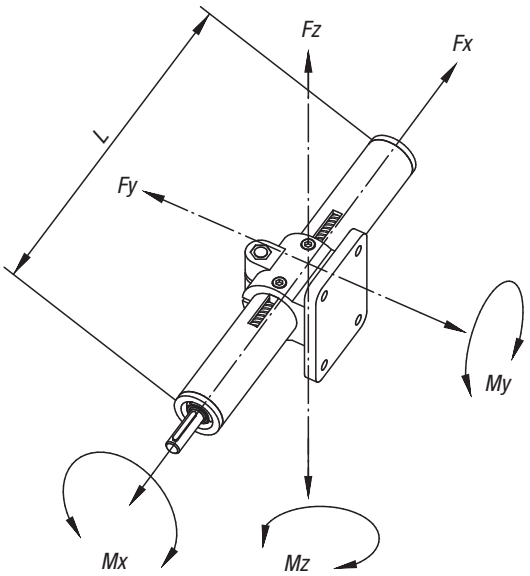

Length	Fx 500	Fy 500 / 1000 / 1500	Fz 500 / 1000 / 1500
Type E 18	400	90 / 10 / -	60 / 8 / -
Type E 30	800	500 / 60 / 10	500 / 50 / 9
Type E 40	1000	2100 / 250 / 60	1900 / 140 / 50
Type E 50	1700	3000 / 600 / 140	3000 / 600 / 140

No-load torques:

Type E	Spindle with slide bearing [Nm]	Spindle with ball bearing [Nm]
18	-	0,20
30	0,45	0,35
40	0,65	0,50
50	1,20	0,90

Type E	Mx	My	Mz	Iy	Iz
18	1,5	4	4	0,22	0,27
30	6	15	15	1,34	1,56
40	14	40	40	4,58	5,24
50	30	65	65	11,31	12,32

* referring to the guide carriage (guide element deflection f = 0.5 mm, static, end elements supported)

Linear units



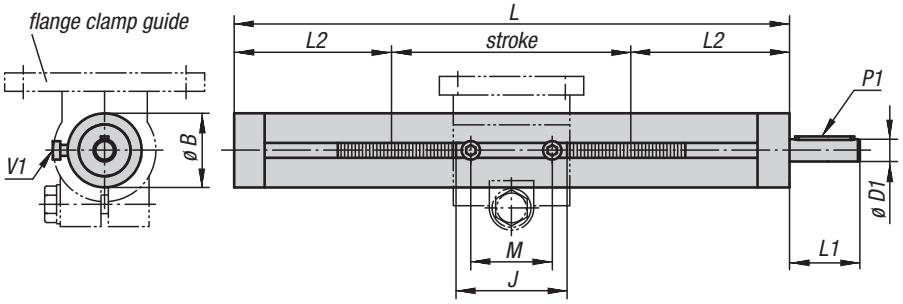

Linear unit
K0495.18...

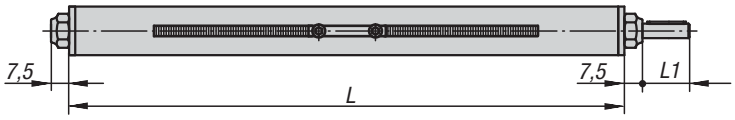

Material, surface finish:
Precision tube according to DIN EN 10305, stainless steel 1.4301. For type E 18, galvanized steel. Trapezoidal thread spindle steel, clockwise thread, rolled.

Sample order:
K0495.300001X500

Note:
Medium rotation speed range, self-locking.
If using a position indicator, only use linear units with ball bearings.

On request:
Left-hand thread, stainless steel finish, 2 drive cones, further strokes or handwheels.

Accessory:
- Clamp guides K0496, K0497, K0498, K0499
- Clamping elements of the tubular connection system
- Digital position indicators K0410 and insert plate K0413

Functional principle:
A rotating movement of the threaded spindle is converted into a linear movement of the guide carriage.

KIPP Linear units

Order No.	Surface finish	Type E	Spindle	L Standard length	Stroke	B	D1	J	L1	L2	M	P1 parallel key DIN 6885	V1	Approx. weight kg
K0495.300001X300	slide bearing	30	Tr 14x3	300	100	30	8 h8	38	26	100	28	2 x 2 x 20	M4x8	0,800
K0495.300001X500	slide bearing	30	Tr 14x3	500	300	30	8 h8	38	26	100	28	2 x 2 x 20	M4x8	1,276
K0495.300001X800	slide bearing	30	Tr 14x3	800	600	30	8 h8	38	26	100	28	2 x 2 x 20	M4x8	1,947
K0495.400001X300	slide bearing	40	Tr 20x4	300	91	40	12 h8	55	38	104,5	44	4 x 4 x 32	M6x10	1,984
K0495.400001X500	slide bearing	40	Tr 20x4	500	291	40	12 h8	55	38	104,5	44	4 x 4 x 32	M6x10	2,920
K0495.400001X800	slide bearing	40	Tr 20x4	800	591	40	12 h8	55	38	104,5	44	4 x 4 x 32	M6x10	4,785
K0495.400001X1000	slide bearing	40	Tr 20x4	1000	791	40	12 h8	55	38	104,5	44	4 x 4 x 32	M6x10	5,865
K0495.500001X500	slide bearing	50	Tr 20x4	500	265	50	12 h8	63	38	117,5	44	4 x 4 x 32	M6x10	4,368
K0495.500001X800	slide bearing	50	Tr 20x4	800	565	50	12 h8	63	38	117,5	44	4 x 4 x 32	M6x10	6,288
K0495.500001X1000	slide bearing	50	Tr 20x4	1000	765	50	12 h8	63	38	117,5	44	4 x 4 x 32	M6x10	7,568
K0495.180101X300	ball bearing	18	Tr 10x2	300	145	18	6 h9	24	17	77,5	18	2 x 2 x 12	M3x5	0,355
K0495.180101X500	ball bearing	18	Tr 10x2	500	345	18	6 h9	24	17	77,5	18	2 x 2 x 12	M3x5	0,550
K0495.300101X300	ball bearing	30	Tr 14x3	300	100	30	8 h8	38	26	100	28	2 x 2 x 20	M4x8	0,800
K0495.300101X500	ball bearing	30	Tr 14x3	500	300	30	8 h8	38	26	100	28	2 x 2 x 20	M4x8	1,276
K0495.300101X800	ball bearing	30	Tr 14x3	800	600	30	8 h8	38	26	100	28	2 x 2 x 20	M4x8	1,947
K0495.400101X300	ball bearing	40	Tr 20x4	300	91	40	12 h8	55	38	104,5	44	4 x 4 x 32	M6x10	1,984
K0495.400101X500	ball bearing	40	Tr 20x4	500	291	40	12 h8	55	38	104,5	44	4 x 4 x 32	M6x10	2,920
K0495.400101X800	ball bearing	40	Tr 20x4	800	591	40	12 h8	55	38	104,5	44	4 x 4 x 32	M6x10	4,785
K0495.400101X1000	ball bearing	40	Tr 20x4	1000	791	40	12 h8	55	38	104,5	44	4 x 4 x 32	M6x10	5,865
K0495.500101X500	ball bearing	50	Tr 20x4	500	265	50	12 h8	63	38	117,5	44	4 x 4 x 32	M6x10	4,368
K0495.500101X800	ball bearing	50	Tr 20x4	800	565	50	12 h8	63	38	117,5	44	4 x 4 x 32	M6x10	6,288
K0495.500101X1000	ball bearing	50	Tr 20x4	1000	765	50	12 h8	63	38	117,5	44	4 x 4 x 32	M6x10	7,568

Cross clamp guides



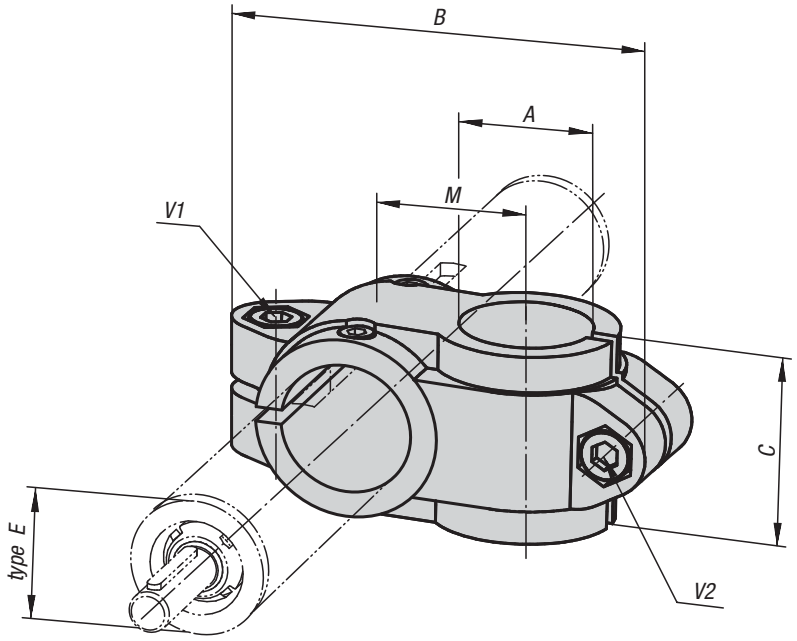

Material, surface finish:
Cast aluminium, black powder-coated; socket head screw to DIN 7984 and hexagon nut to DIN 985 in galvanized steel

Sample order:
K0496.1818

On request:
Clamp levers for fixing.

KIPP Cross clamp guides

Order No.	Type E	A	B	C	M	V1	V2
K0496.1818	18	18	66	25,5	20	M6x16	M6x16
K0496.3020	30	20	99	40	33	M8x25	M8x25
K0496.3030	30	30	99	40	33	M8x25	M8x25
K0496.4020	40	20	109	40	36	M10x30	M8x25
K0496.4040	40	40	137	60	45	M10x30	M10x30
K0496.5040	50	40	154	70	54	M10x35	M10x35
K0496.5050	50	50	154	70	54	M10x35	M10x35

Cross clamp guides



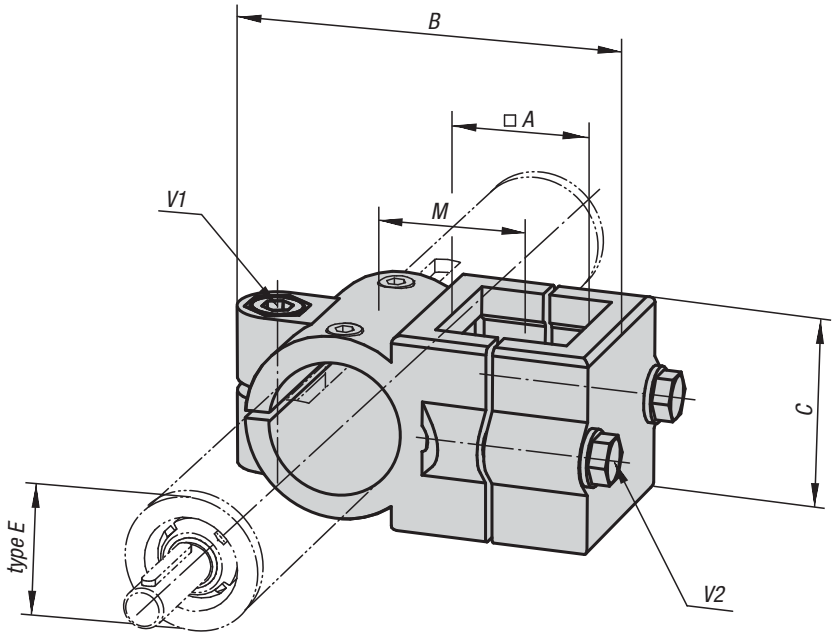

Material, surface finish:
Cast aluminium, black powder-coated;
clamping screw with nut in galvanized steel

Sample order:
K0497.4040

On request:
Clamp levers for fixing.

KIPP Cross clamp guides

Order No.	Type E	A	B	C	M	V1	V2
K0497.3030	30	30	86	45	33	M8x35	M8x35
K0497.4040	40	40	117	60	47	M10x50	M8x45
K0497.5050	50	50	126	86	53	M8x50	M8x50

Flange clamp guides



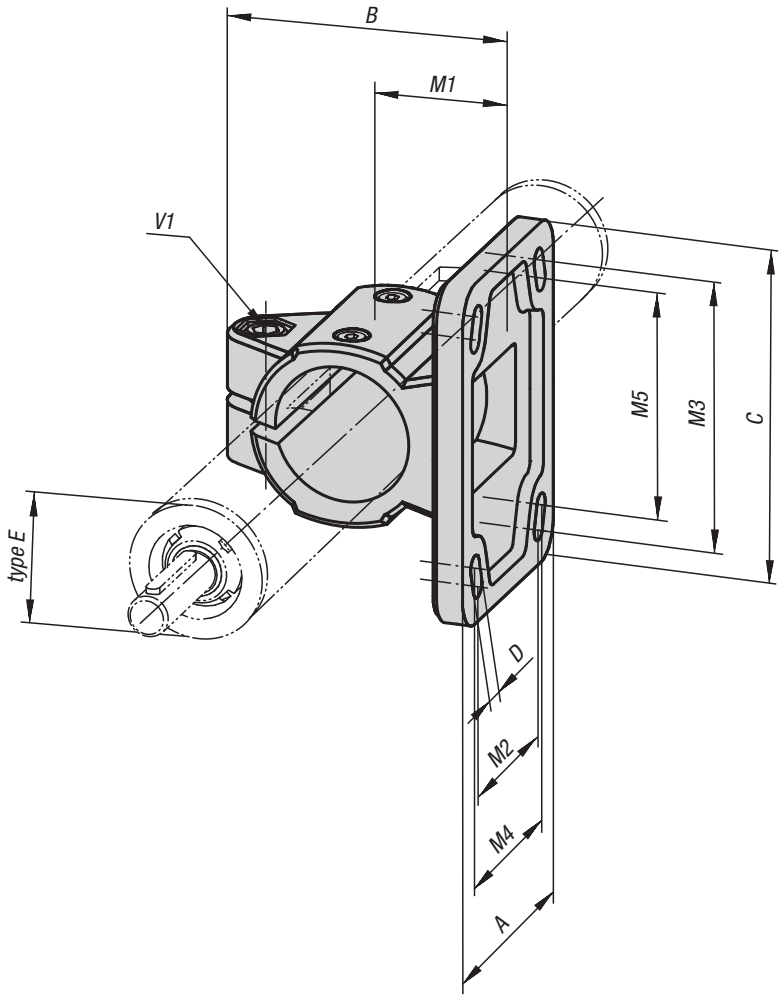

Material, surface finish:
Cast aluminium, black powder-coated; socket head screw to DIN 7984 and hexagon nut to DIN 985 in galvanized steel

Sample order:
K0498.50

Note:
* Oblong hole.

On request:
Clamp levers for fixing.

KIPP Flange clamp guides

Order No.	Type E	A	B	C	D	M1	M2	M3	M4	M5	V1
K0498.18	18	37	42,5	50	5,5 (2x)	18	-	40	-	-	M6x16
K0498.30	30	55	63	78	6,5* (2x)	30	-	60	-	53	M8x25
K0498.40	40	80	87	105	8,5* (4x)	42	52	82	60	80	M10x30
K0498.50	50	92	100	130	10,5* (4x)	50	60	100	62	98	M10x35

Base clamp guides



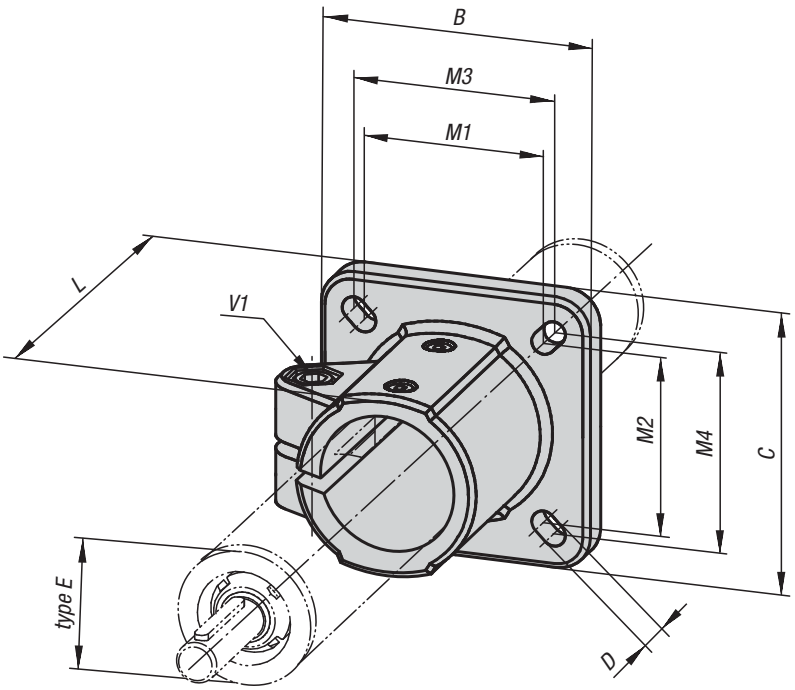

Material, surface finish:
Cast aluminium, black powder-coated; socket head screw to DIN 7984 and hexagon nut to DIN 985 in galvanized steel

Sample order:
K0499.30

Note:
* Oblong hole.

On request:
Clamp levers for fixing.

KIPP Base clamp guides

Order No.	Type E	B	C	D	L	M1	M2	M3	M4	V1
K0499.18	18	42	42	5,8	37	30	30	-	-	M6x16
K0499.30	30	60	60	6,5*	50	40	45	42	42	M8x25
K0499.40	40	90	90	8,5*	70	60	60	64	64	M10x30
K0499.50	50	105	105	10,5*	85	74	74	80	80	M10x35

Notes

Technical information plug-in connectors

High quality plastic plug-in connectors with steel core, for insertion into square tubing
A combination of plug-in connectors and the, for these specially developed aluminium profiles give unlimited construction possibilities. The system can be combined with many different materials, from coated chipboard up to glass and plastic sheeting. No screws required, the plug-in connectors are simply inserted into the corresponding square tubing. This means that they can be disassembled and reused repeatedly. If disassembly is to be prevented, the plug-in connectors can be secured using glue, screws or rivets.

Load rating of plug-in connectors
Plug-in connectors with steel core for square tubes 25x25x1.5 and 30x30x2 have a compressive strength of max. 400 kg per horizontal connecter plug under the following conditions:

- the spacing between the exterior wall of the vertical tube and the outer edge of the load must not exceed 10 mm.
- the bottom of the load is so rigid that load transmission occurs entirely at the vertices of the load (see diagram).
- the loading is purely static i.e. no dynamic stress due to moving loads.

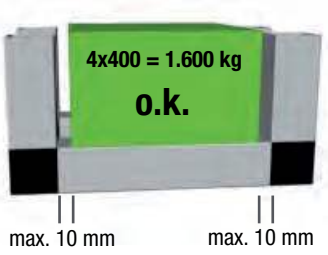

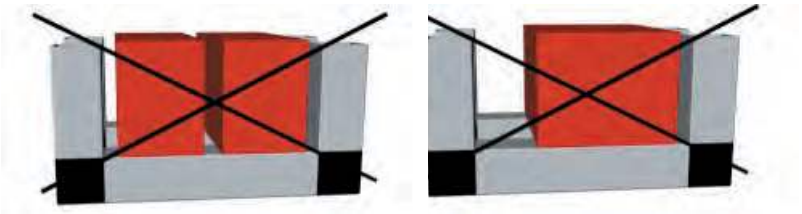

Note:
Please note that the use of items such as adjustable sliders, thread plugs and swivel pads in conjunction with the plug-in connectors can decrease these values for the entire unit.

Mitre Cuts
Mitre cuts are required when square tubes with web come in contact with a plug-in connector. On request, we can supply our square tubes with web with mitre cut.



In the case of a mitre cut, a 90° cut is made on the square and a 45° cut on the land. Surface preparation occurs prior to the cut. i.e., the edges of cut have a natural finish.

Plug connector

connecting piece



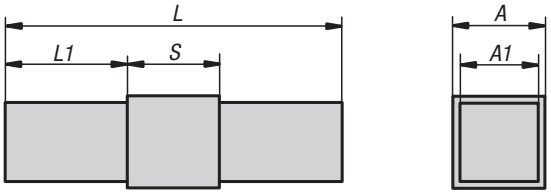

Material, surface finish:
Polyamide PA, black.
Steel core inlay in steel, galvanized.

Sample order:
K0615.1201512

Note:
Plug system without screws. The plug connectors are simply inserted into the corresponding square tube. They can be disassembled and used again.

Accessory:
- Square tubes K0627
- Sqaure tubes with web K0628



KIPP Plug connector connecting piece

Order No.	A	A1	L	L1	S	Suitable for square tubes
K0615.1201512	20	17	95	45	5	20 x 20 x 1,5
K0615.1251512	25	22	133	54	25	25 x 25 x 1,5
K0615.1302012	30	26	122	46	30	30 x 30 x 2

Plug connector

right angle



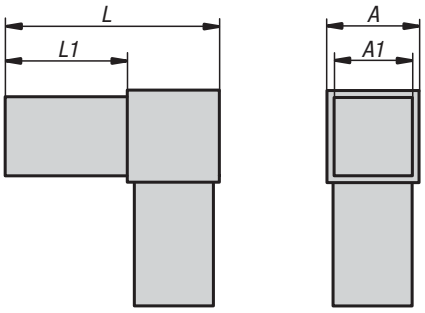

Material, surface finish:
Polyamide PA, black.
Steel core inlay in steel, galvanized.

Sample order:
K0616.1201512

Note:
Plug system without screws. The plug connectors are simply inserted into the corresponding square tube. They can be disassembled and used again.

Accessory:
- Square tubes K0627
- Sqaure tubes with web K0628



KIPP Plug connector right angle

Order No.	A	A1	L	L1	Suitable for square tubes
K0616.1201512	20	17	56	36	20 x 20 x 1,5
K0616.1251512	25	22	77	52	25 x 25 x 1,5
K0616.1302012	30	26	77	47	30 x 30 x 2

Plug connector

T-piece



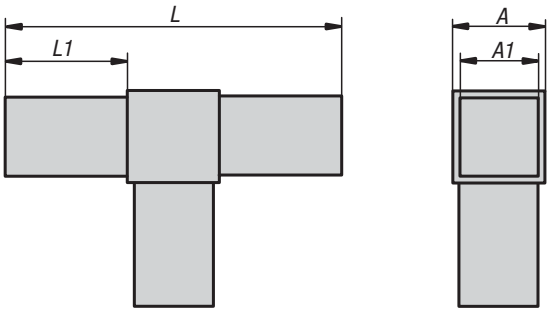

Material, surface finish:
Polyamide PA, black.
Steel core inlay in steel, galvanized.

Sample order:
K0617.1201512

Note:
Plug system without screws. The plug connectors are simply inserted into the corresponding square tube. They can be disassembled and used again.

Accessory:
- Square tubes K0627
- Sqaure tubes with web K0628



KIPP Plug connector T-piece

Order No.	A	A1	L	L1	Suitable for square tubes
K0617.1201512	20	17	92	36	20 x 20 x 1,5
K0617.1251512	25	22	127	51	25 x 25 x 1,5
K0617.1302012	30	26	124	47	30 x 30 x 2

Plug connector

cross piece



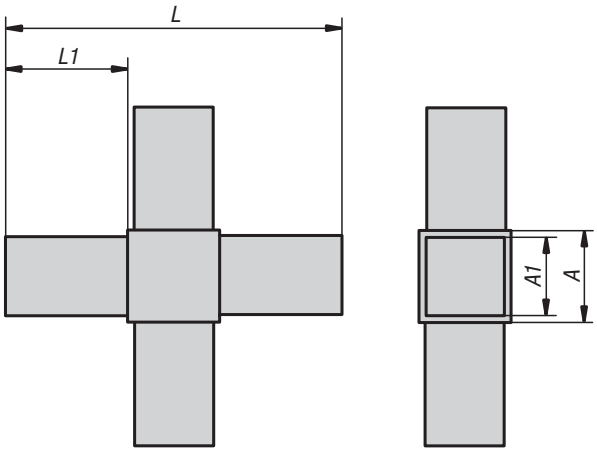

Material, surface finish:
Polyamide PA, black.
Steel core inlay in steel, galvanized.

Sample order:
K0618.1201512

Note:
Plug system without screws. The plug connectors are simply inserted into the corresponding square tube. They can be disassembled and used again.

Accessory:
- Square tubes K0627
- Sqaure tubes with web K0628

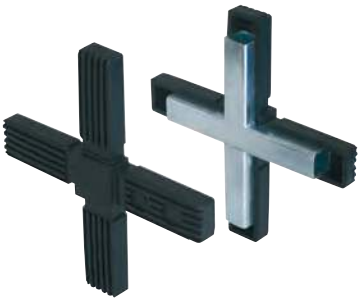

KIPP Plug connector cross piece

Order No.	A	A1	L	L1	Suitable for square tubes
K0618.1201512	20	17	92	36	20 x 20 x 1,5
K0618.1251512	25	22	127	51	25 x 25 x 1,5
K0618.1302012	30	26	124	47	30 x 30 x 2

Plug connector

angle with outlet



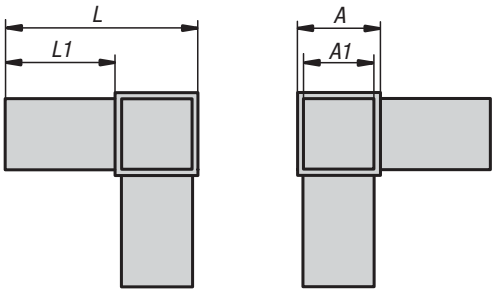

Material, surface finish:
Polyamide PA, black.
Steel core inlay in steel, galvanized.

Sample order:
K0619.1201512

Note:
Plug system without screws. The plug connectors are simply inserted into the corresponding square tube. They can be disassembled and used again.

Accessory:
- Square tubes K0627
- Sqaure tubes with web K0628



KIPP Plug connector angle with outlet

Order No.	A	A1	L	L1	Suitable for square tubes
K0619.1201512	20	17	56	36	20 x 20 x 1,5
K0619.1251512	25	22	77	52	25 x 25 x 1,5
K0619.1302012	30	26	77	47	30 x 30 x 2

Plug connector

T-piece with outlet



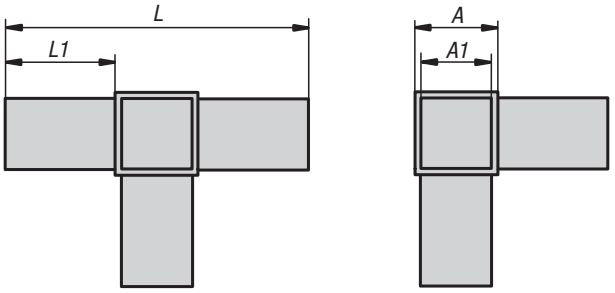

Material, surface finish:
Polyamide PA, black.
Steel core inlay in steel, galvanized.

Sample order:
K0620.1201512

Note:
Plug system without screws. The plug connectors are simply inserted into the corresponding square tube. They can be disassembled and used again.

Accessory:
- Square tubes K0627
- Sqaure tubes with web K0628



KIPP Plug connector T-piece with outlet

Order No.	A	A1	L	L1	Suitable for square tubes
K0620.1201512	20	17	92	36	20 x 20 x 1,5
K0620.1251512	25	22	129	52	25 x 25 x 1,5
K0620.1302012	30	26	124	47	30 x 30 x 2

Plug connector

cross with outlet



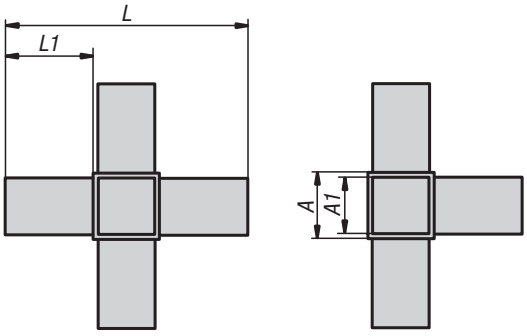

Material, surface finish:
Polyamide PA, black.
Steel core inlay in steel, galvanized.

Sample order:
K0621.1201512

Note:
Plug system without screws. The plug connectors are simply inserted into the corresponding square tube. They can be disassembled and used again.

Accessory:
- Square tubes K0627
- Sqaure tubes with web K0628



KIPP Plug connector cross with outlet

Order No.	A	A1	L	L1	Suitable for square tubes
K0621.1201512	20	17	92	36	20 x 20 x 1,5
K0621.1251512	25	22	133	54	25 x 25 x 1,5
K0621.1302012	30	26	124	47	30 x 30 x 2

Plug connector

star



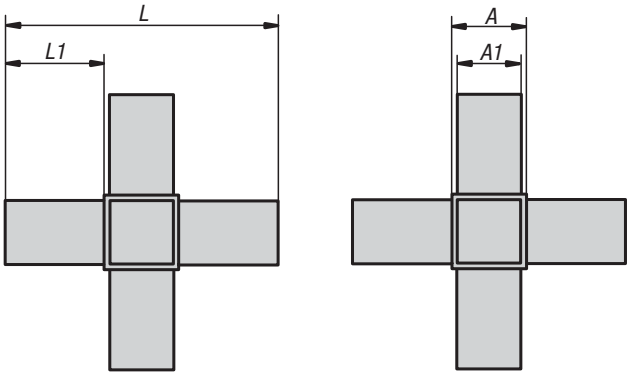

Material, surface finish:
Polyamide PA, black.
Steel core inlay in steel, galvanized.

Sample order:
K0622.1201512

Note:
Plug system without screws. The plug connectors are simply inserted into the corresponding square tube. They can be disassembled and used again.

Accessory:
- Square tubes K0627
- Sqaure tubes with web K0628



KIPP Plug connector star

Order No.	A	A1	L	L1	Suitable for square tubes
K0622.1201512	20	17	92	36	20 x 20 x 1,5
K0622.1251512	25	22	129	52	25 x 25 x 1,5
K0622.1302012	30	26	124	47	30 x 30 x 2

Plug connector

angle with outlet and thread



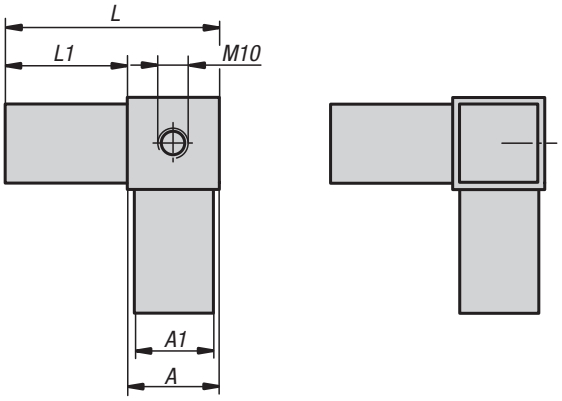

Material, surface finish:
Polyamide PA, black.
Steel core inlay in steel, galvanized.

Sample order:
K0623.125151210

Note:
Plug system without screws. The plug connectors are simply inserted into the corresponding square tube. They can be disassembled and used again. For assembly of swivel pads, rollers etc.

Accessory:
- Square tubes K0627
- Sqaure tubes with web K0628



KIPP Plug connector angle with outlet and thread

Order No.	A	A1	L	L1	Suitable for square tubes
K0623.125151210	25	22	77	52	25 x 25 x 1,5
K0623.130201210	30	26	77	47	30 x 30 x 2

Plug connector

T-piece with outlet and thread



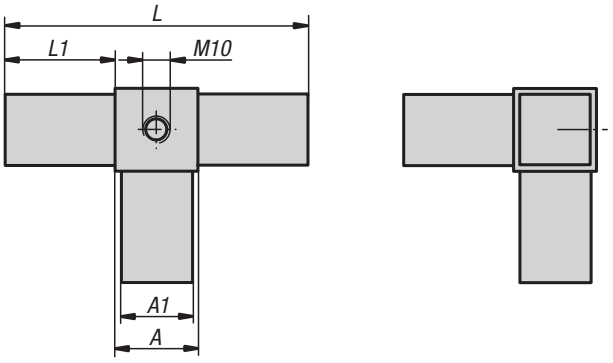

Material, surface finish:
Polyamide PA, black.
Steel core inlay in steel, galvanized.

Sample order:
K0624.125151210

Note:
Plug system without screws. The plug connectors are simply inserted into the corresponding square tube. They can be disassembled and used again. For assembly of swivel pads, rollers etc.

Accessory:
- Square tubes K0627
- Sqaure tubes with web K0628



KIPP Plug connector T-piece with outlet and thread

Order No.	A	A1	L	L1	Suitable for square tubes
K0624.125151210	25	22	129	52	25 x 25 x 1,5
K0624.130201210	30	26	124	47	30 x 30 x 2

Plug connector

leg



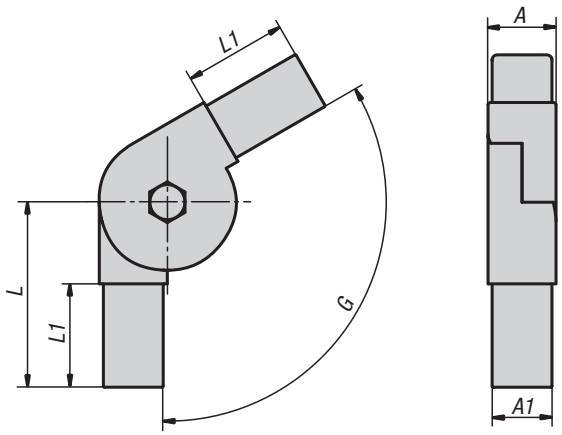

Material, surface finish:
Polyamide PA, black.
Socket head screw to DIN 6912 and hexagon nut DIN 934, galvanized steel.

Sample order:
K0625.1251511

Note:
The plug connectors are simply inserted into the corresponding square tube. They can be disassembled and used again. The specified adjustment range can be aligned continuously.

Accessory:
- Square tubes K0627
- Sqaure tubes with web K0628

KIPP Plug connector leg

Order No.	A	A1	L	L1	G	Suitable for square tubes
K0625.1251511	25	22	68	38	0° - 190°	25 x 25 x 1,5
K0625.1251512	25	22	59	38	45° - 195°	25 x 25 x 1,5

Plug connector

leg with one outlet



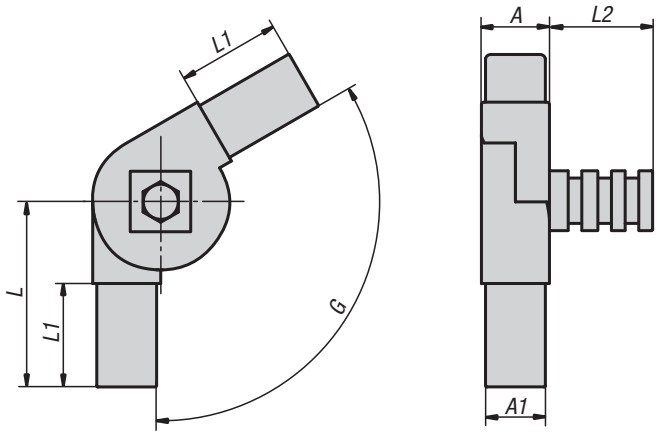

Material, surface finish:
Polyamide PA, black.
Socket head screw to DIN 6912 and hexagon nut DIN 934, galvanized steel.

Sample order:
K0626.1251511

Note:
The plug connectors are simply inserted into the corresponding square tube. They can be disassembled and used again. The specified adjustment range can be aligned continuously. The outlet can be revolved around its own axis.

Accessory:
- Square tubes K0627
- Sqaure tubes with web K0628

KIPP Plug connector leg with one outlet

Order No.	A	A1	L	L1	L2	G	Suitable for square tubes
K0626.1251511	25	22	68	38	42	0° - 190°	25 x 25 x 1,5
K0626.1251512	25	22	59	38	42	45° - 195°	25 x 25 x 1,5

Square tubes



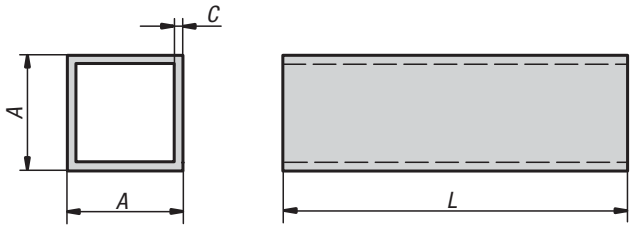

Material:
Aluminium profile.

Surface finish:
silver-coloured anodized.

Sample order:
K0627.120152X2000

Note:
The square tubes are individually adjusted to our plug connectors.

On request:
- Other lengths (L max. 4000 mm)

KIPP Square tubes

Order No.	A	C	L
K0627.120152X2000	20	1,5	2000
K0627.125152X2000	25	1,5	2000
K0627.130202X2000	30	2	2000

Square tubes

with web

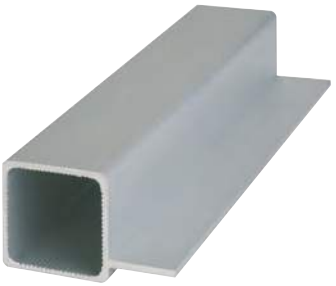

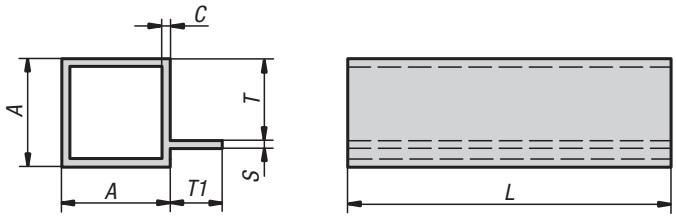

Material:
Aluminium profile.

Surface finish:
silver-coloured anodized.

Sample order:
K0628.125152X2000

Note:
The square tubes are individually compatible with our plug connectors.

On request:
- Other lengths (L max. 4000 mm)
- Mitre cuts

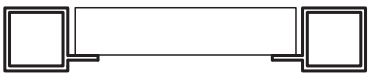

KIPP Square tubes with web

Order No.	A	C	L	S	T	T1
K0628.125152X2000	25	1,5	2000	2	19	15

Screw connection for dial gauges

with clamping shaft Ø 8



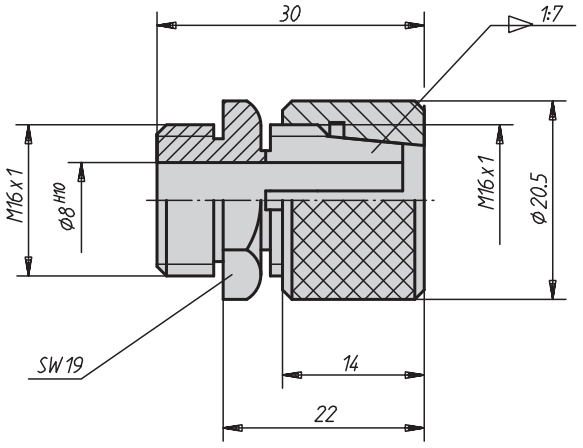

Material:
Tempered steel

Surface finish:
Black oxide finish,
collet tempered

Sample order:
K0629.08

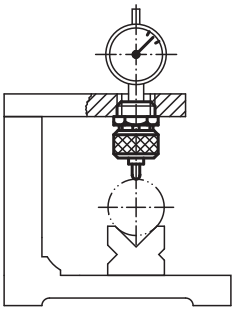

KIPP Screw connection for dial gauges with clamping shaft Ø 8

Order No.	Approx. weight kg
K0629.08	0,042

Notes

The standard terms and conditions of sale, delivery and payment that you can