Conveyor system XH

Contents

Catenary drive units XH 233
Bend drive unit XH 234
Idler units XH 234
Bridges 235
Wheel bends XH 236
Wheel cover for Wheel bend 237
Plain bends XH 237
Support rail for plain bends XH 238
Vertical bends XH 239
Angle plates XH 240
Front piece XH 241
Drip trays XH 242
Drip catchers XH 243
Drip pans XH 243

System information



Chain width 103 mm



Features

Suitable for larger items, especially if point of balance is somewhat offcenter. Higher capacity than XS and X65.

Examples of application areas

Large ball bearings, electric motors, steering arm components, secondary packages, cartons.

Technical characteristics

Drive unit capacity	1250 N
Chain tension limit	1250 N
Beam width	105 mm
Chain width	103 mm
Chain pitch	35,5 mm
Item width	25–300 mm
Maximum item weight	
Horizontal transport	20 kg
Vertical transport	15 kg
Maximum weight on conveyor	150–300 kg
Maximum conveyor length	30 m
Maximum permitted load per link	2,0 kg

Straight conveyor

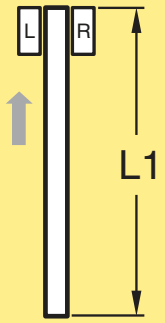

Conveyor module – straight * **5990226**

**Use online configurator when ordering*

One bend conveyor

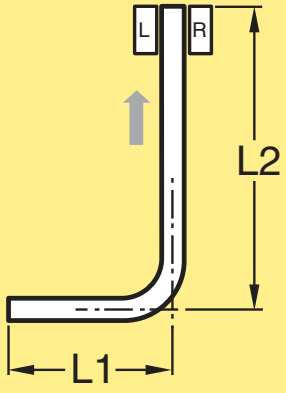

Conveyor module – one bend * **5990230**

**Use online configurator when ordering*

Two bend conveyor

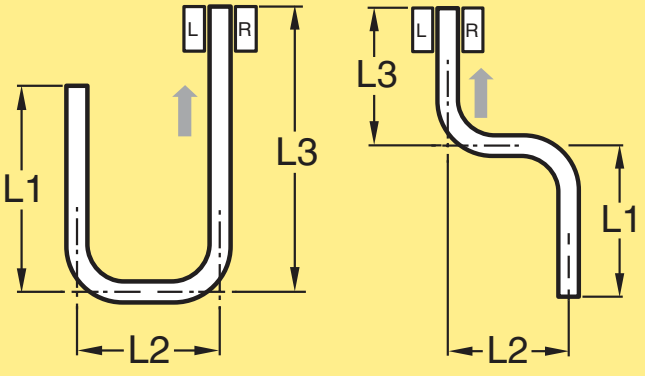

Conveyor module – two bends * **5990237**

**Use online configurator when ordering*

Support modules – single and multi-lane

	5995387	Single diecast
	5995388	Single end adjustable
	5995389	Single end guide roller
	5995390	Single foot plate
	5995391	Single two/three-point
	5995393	Multi single 2 lane
	5995394	Multi single 3 lane
	5995395	Multi single 4 lane
	5995396	Multi double 2lane
	5995397	Multi double 3 lane
	5995398	Multi double 4 lane

 © FlexLink 2021

Plain chain

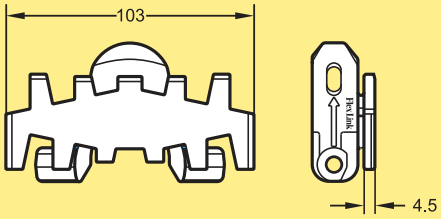

Plain chain Length 5 m	**XHTP 5**
Plain link kit *	**5056312**
Plain chain (Ultra low wear) Length 5 m	**XHTP 5 C**
Plain link (Ultra low wear)	**n.a.**

**Note. Link kit contains 10 links, 10 pivot, 10 steel pins.*

Friction top chain

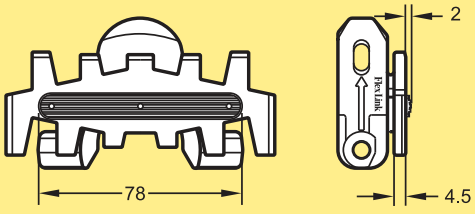

Friction top chain Length 5 m	**XHTP 5 FP**

Use the online configurator to specify and order.

Friction top chain Length 5 m	**XHTP 5 F**
Friction top link kit *	**5056593**

**Note. Link kit contains 10 links, 10 pivot, 10 steel pins.*

Flat top friction chain

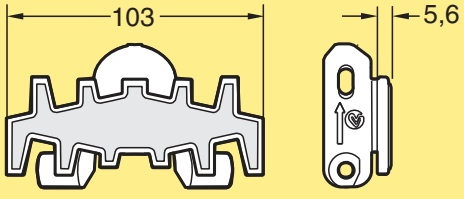

Flat top friction chain Length 5 m	**XHTP 5 FA**
Flat top friction link kit *	**5058544**

**Note. Link kit contains 10 links, 10 pivot, 10 steel pins.*

Steel top chain

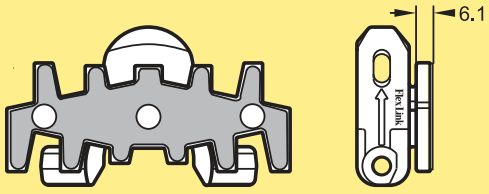

Steel top chain Length 5 m	**XHTP 5 TF**
Steel top link kit *	**5056594**

Note. Link kit contains 10 links, 10 pivot, 10 steel pins.

Cleated chain, Type A

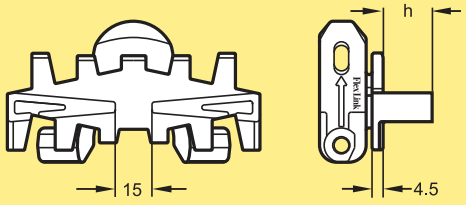

Cleated chain, Type A cleats* Length 5 m	
h=15 mm	**XHTF 5×15 A**
h=20 mm	**XHTF 5×20 A**
h=30 mm	**XHTF 5×30 A**
h=40 mm	**XHTF 5×40 A**

**Use the online configurator to specify and order.*

Cleated link kit ** h=15 mm	**5056595**
h=20 mm	**5056596**
h=30 mm	**5056597**
h=40 mm	**5056598**

***Note. Link kit contains 10 links, 10 pivot, 10 steel pins.*

Roller top chain

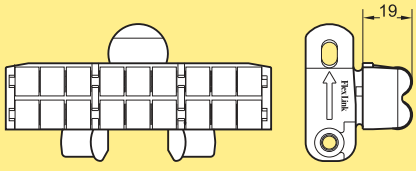

Roller top chain Length 5 m	**XHTR 5**
Roller top link kit *) **)	**5056603**

**Note. This link cannot be combined with plain links.*
***Note. Link kit contains 10 links, 10 pivot, 10 steel pins.*

Chain with roller cleats

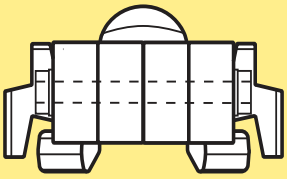

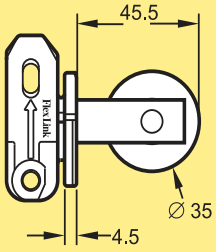

Chain with roller cleats
Length 5 m **XHTF 5×46 R**

Use the online configurator to specify and order.

Link kit with roller cleats* **5056604**

Note. This type of chain requires minimum one plain link between every cleated link.
**Note. 1 link XHTL 103x46 R with pivot and steel pin.*

Other chains

See the *Chain guide* for a selection of other chains.

Chain installation

See Appendix C, page 527, for installation instructions

Chain accessories XH

Plastic pivot



Plastic pivots, kit XH (25 pcs) **5056588**

Steel pin

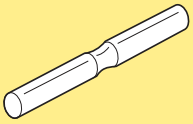

Steel pin, kit (25 pcs) XH **5111502**

Pin insertion tool for chain

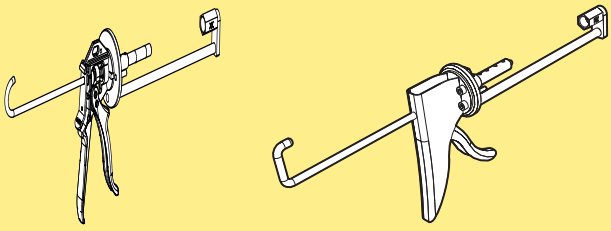

Pin insertion tool
XH
X85-X180/X300-XH, PRO version* **XHMJ 6**
XBMJ 6 P

This tool is recommended for frequent users

Beams XH

Conveyor beam

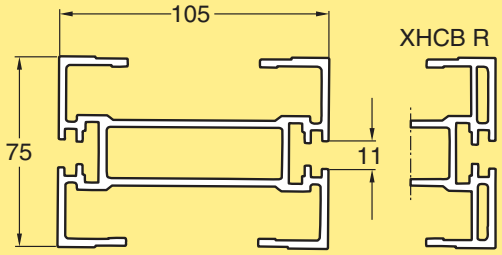

Beam
Length 3000 +10/-0 mm **XHCB 3**
Length to order (30- 3000 mm) **XHCB L**

Beam, reinforced
Length 3000 +10/-0 mm **XHCB 3 R**
Length to order (30- 3000 mm) **XHCB L R**

Beam section for chain installation

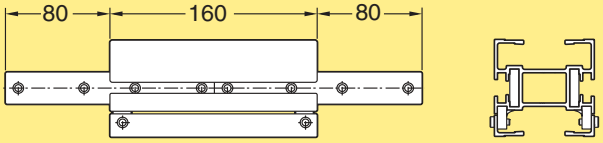

Beam section for chain installation
Including connection strips and screws **XHCC 160 A**

Profile for split conveyor beam

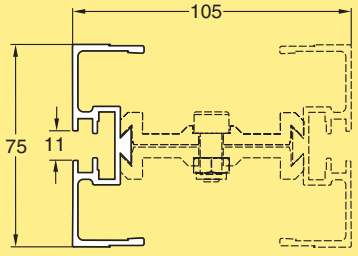

Profile for split conveyor beam
Length 3000 +10/-0 mm **XHCB 3 H**
Length to order (30- 3000 mm) **XHCB L H**

Beam clip assembly

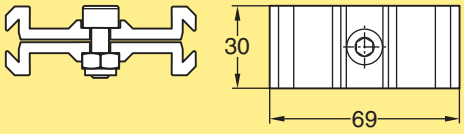

Beam clip assembly **XHCE 69×30**

Including M8 screw and locking nut. Use minimum 5 clips per meter. Place clips 100 mm from each end.

 © FlexLink 2021

Connecting strip with set screws

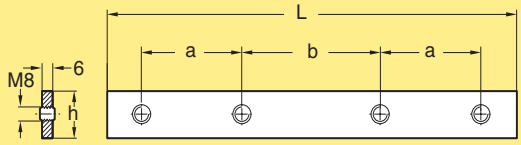

Connecting strip with set screws
h=25, a=30, b=50, L=130 **XLCJ 6×130**
h=25, a=44, b=44, L=160 **XLCJ 6×160**

Note. Contains 10 pcs.

Cover strip for T-slot, PVC

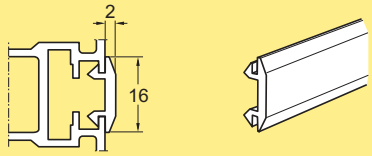

Cover strip for T-slot, PVC
Length 25 m **XLAB 25**

For XS-XH

Beam spacer

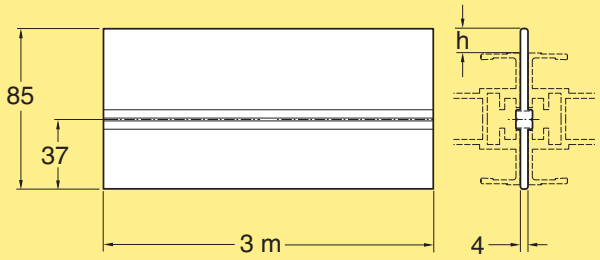

XS	X65	X85/XH	XK
h=16,0 mm	h=15,9 mm	h=10,5 mm	h=0,5 mm

Beam spacer
Aluminium, anodized
Length 3 m **XLCD 3**

For connection of two conveyor beams side to side. Use M8 screw and slot nut. Two holes must be drilled, one through the spacer (9 mm) and one through the beam, to allow insertion of the screw. The diameter of the second hole depends on the size of the screw head.

Articulated beam section

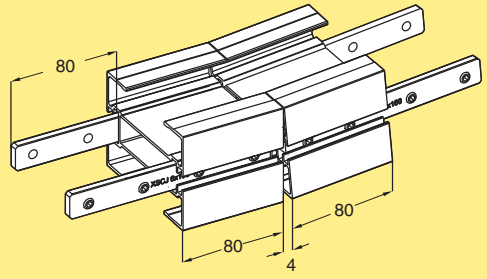

Articulated beam section vertical **XHCH 5 V**

Plastic slide rails for beams

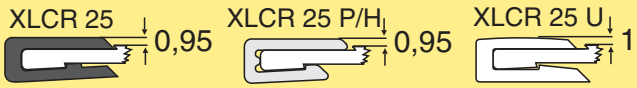

Slide rail
Length 25 m

HDPE (μ=0,1–0,25) (Black)	**XLCR 25**
PA-PE (μ=0,1–0,25) (Grey)	**XLCR 25 H**
PVDF (μ=0,15–0,35) (Natural white)	**XLCR 25 P**
PE-UHMW (μ=0,1–0,25) (White)	**XLCR 25 U**
PE-UHMW conductive (Black)	**XLCR 25 E**

See Appendix A, page 513 for selection guidelines and assembly instructions.

Steel slide rail for beams



Slide rail (μ=0,15–0,35)
Length 3 m
Acid resistant stainless steel **XLCR 3 TA**

Mounting tool for slide rail



Mounting tool for slide rail XH **XHMR 200**

Aluminium rivets

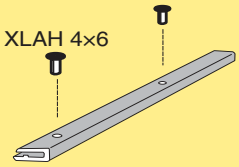

Aluminium rivets 4 mm for X65-X85-XH conveyors **XLAH 4×6**

Extra slide rail in plain bends must be anchored using plastic screws due to lack of space for the rivet crimping tool.
Note. Contains 250 pcs. 250.

Plastic screws for slide rail

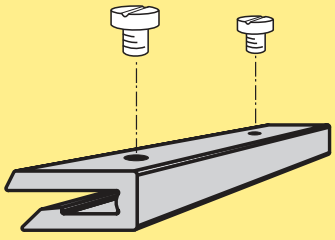

Plastic screws 5 mm for XS-X65-X85-XH-X180/X300 beams **XLAG 5**

See mounting instruction "Anchoring slide rail using plastic screws" on page 522

Note. Contains 50 pcs.

Drill fixture for slide rail

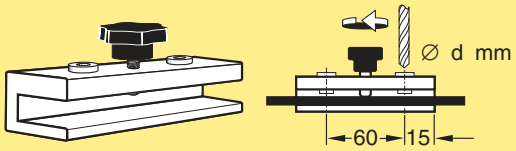

Drill fixture for X65-X85-XH-XK-X180/X300 slide rail
d=4,2 mm **3920500**

Rivet crimping pliers



Rivet crimping pliers for X65-X85-XH-XK-X180/X300
For 4 mm rivets **5051395**

Rivet crimping clamp

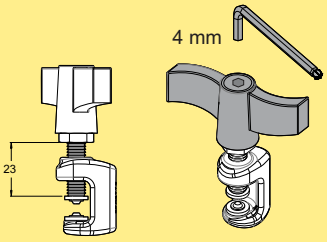

Rivet crimping clamp for X65-X85-XH-XK-X180/X300
For 4 mm rivets
(Allen key not included) **3923005**

Cover strip

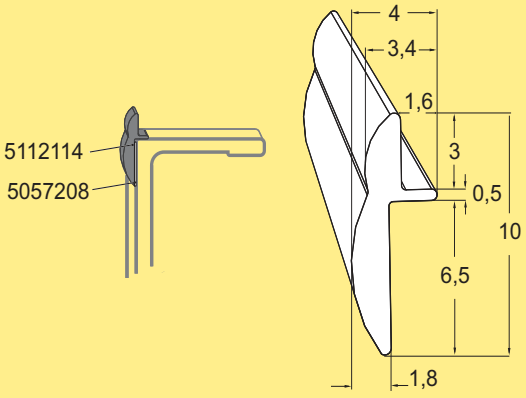

Cover strip
Length: 3 m
Material: Plastic PA 12 **5112114**

Cover the opening on the side between the chain and beam. Primarily for straight sections and the outer curves, but can also be mounted on inner curves. Apply using a double-sided tape, see mounting instruction 5497EN in Technical library.

 © FlexLink 2021

Steel slide rail, straight

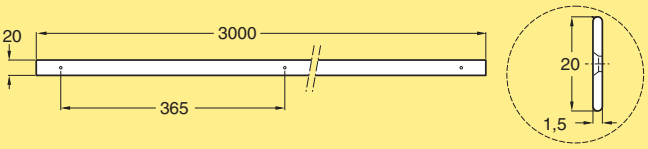

Slide rail, hardened steel
Length 3 m **XLCR 3 TH**

Delivered with 9 predrilled holes

Steel slide rail for bends

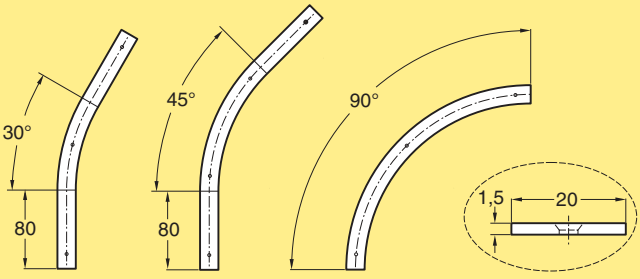

Slide rail for bends, hardened steel
Slide rail for bend, XH 30° **XHCR W30 TH**
Slide rail for bend, XH 45° **XHCR W45 TH**
Slide rail for bend, XH 90° & 180° **XHCR W90 TH**

180°: Use 2 pieces of steel slide rail 90°

Brass rivets

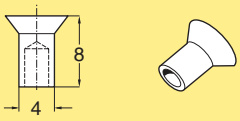

Brass rivets (100 pcs) **5056167**

Rivets for anchoring the slide rails

Cleaner 3M



Cleaner (100 sachets) **5057207**

Use cleaner on beam and slide rail before attaching glue tape.

Glue tape 3M



Glue tape (for X65, X85, XH)
Length 30 m **5057208**

Drive and idler units – introduction

Drive unit types

The XH system includes several configurations are available, including direct driven units with or without slip clutch. Heavy duty drives with suspended motor and transmission chain can also be ordered.

Available motors include variable speed types (**V**) as well as fixed speed motors (**F**).

End drive units

Size	Direct drive, no slip clutch	Direct drive, slip clutch	Suspended motor, transmission chain, slip clutch
	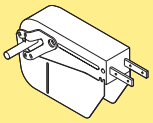	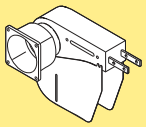	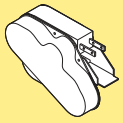
Heavy	**F, V**	**F, V**	**F**
Heavy, guided	**F, V**	**F, V**	**–**

Intermediate drive units

Size	Suspended motor, transmission chain, slip clutch
	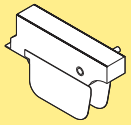
Heavy	**F**

Catenary drive units

Size	Suspended motor, transmission chain, slip clutch
	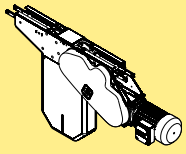
Heavy	**F**

Wheel bend drive units

Size	Suspended motor, transmission chain, slip clutch
	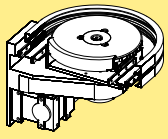
Heavy	**F**

Double drive units

Size	Suspended motor, transmission chain, slip clutch
	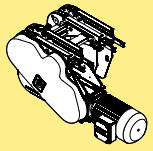
Heavy	**F**

Motor specifications

Motors are available for 230/400 V, 50 Hz and 230/460 V, 60 Hz. Variable speed motors are SEW Movimot, 380–500 V. Note that variable speed motors include a control box that adds 120 mm to the width of the motor.
IP55 available with standard oil.
IP65 available with food grade oil.

Ordering information

Drive units with motors must be specified using the web-based configurator. The configurator provides detailed information and step-by-step guidance in the specification process. A product code string is generated, containing the specification details. See next page for examples of code strings.

Drive units *without* motors can be ordered using the designations in the catalogue.

Dimension

Note that dimensions relating to drive unit motors depend on the motor specified during the configuration.

© FlexLink 2021

End drive units XH

End drive unit, suspended, slip clutch

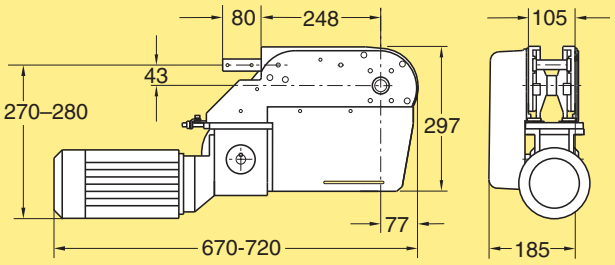

End drive unit
- Speed up to 60 m/min
- Transmission on left side
- Fixed speed*
- Without motor (ISO)
- Without motor (ANSI)

XHEB
XHEB 0 HL
XHEB 0 HLA

Maximum traction force: 1250 N. See page 22.
**Use online configurator when ordering.*
Effective track length: 0,80 m

End drive unit, suspended, slip clutch

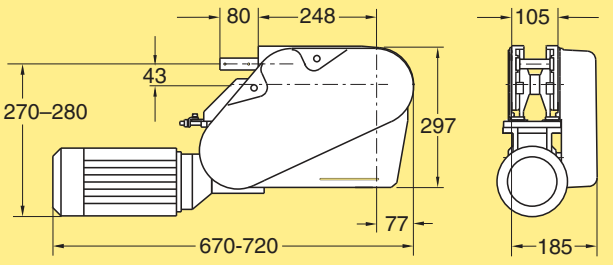

End drive unit
- Speed up to 60 m/min
- Transmission on right side
- Fixed speed*
- Without motor (ISO)
- Without motor (ANSI)

XHEB
XHEB 0 HR
XHEB 0 HRA

Maximum traction force: 1250 N. See page 22.
**Use online configurator when ordering.*
Effective track length: 0,80 m

End drive units XH, direct drive with slip clutch

End drive unit, direct drive with slip clutch

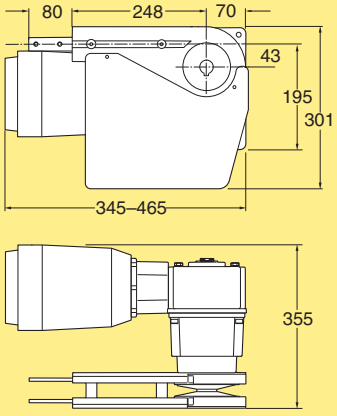

End drive unit, direct drive
- Fixed speed up to 60 m/min
- *Variable speed: see Drive Unit Guide*
- Motor on left side
- Fixed/variable speed*
- Without motor

XHEB
XHEB 0 HLP

Maximum traction force: 1250 N. See page 22.
** Use online configurator when ordering.*
Effective track length: 0,80 m

End drive unit, direct drive with slip clutch

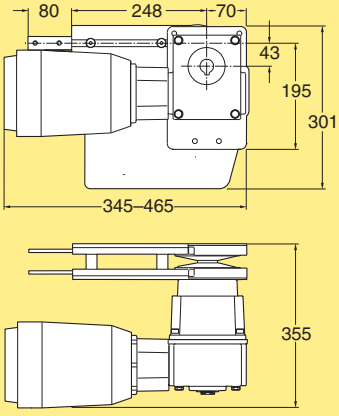

End drive unit, direct drive
- Fixed speed up to 60 m/min
- *Variable speed: see Drive Unit Guide*
- Motor on right side
- Fixed/variable speed*
- Without motor

XHEB
XHEB 0 HRP

Maximum traction force: 1250 N. See page 22.
** Use online configurator when ordering.*
Effective track length: 0,80 m

End drive units XH Type H, direct drive, no slip clutch

End drive unit, direct drive, no slip clutch

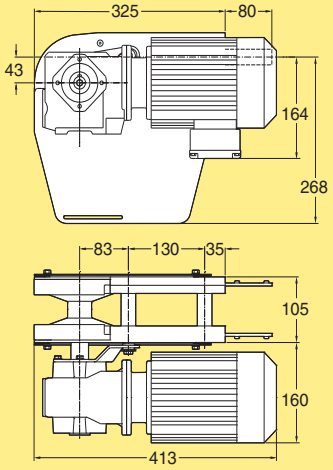

End drive unit, max 1250 N
Fixed speed up to 60 m/min
Variable speed: see Drive Unit Guide
Motor on left side
Fixed/variable speed*
Without motor

XHEB
XHEB 0 HNLP

Maximum traction force: see diagram, page 22.
**Use online configurator when ordering.*
Effective track length: 0,80 m

End drive unit, direct drive, no slip clutch

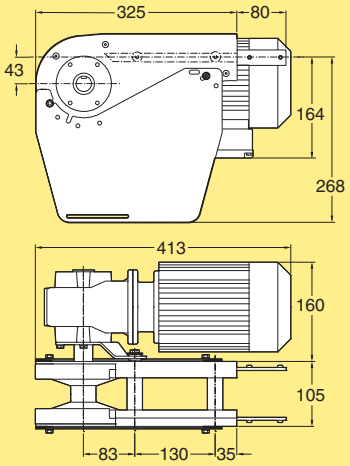

End drive unit, max 1250 N
Fixed speed up to 60 m/min
Variable speed: see Drive Unit Guide
Motor on left side
Fixed/variable speed*
Without motor

XHEB
XHEB 0 HNRP

Maximum traction force: see diagram, page 22.
**Use online configurator when ordering.*
Effective track length: 0,80 m

Double drive units XH

Double drive unit, suspended

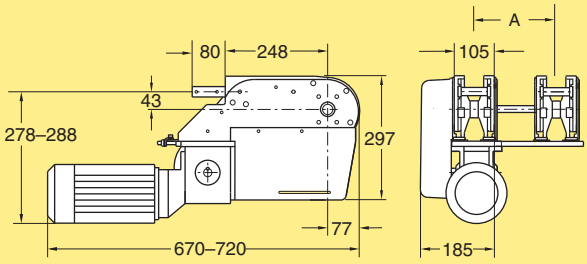

Double drive unit
Suspended motor
Fixed speed up to 60 m/min
Transmission on left side
A = 106 mm
Fixed speed*
Without motor (ISO)
Without motor (ANSI)

XHEB DD
XHEB 0 HLD106
XHEB 0 HLAD106

A = 150–350 mm
Without motor (ISO)
Without motor (ANSI)

XHEB 0 HLD–
XHEB 0 HLAD–

Maximum traction force: 1250 N. See page 22.
** Use online configurator when ordering.*
Effective track length: 0,80 m

Double drive unit, suspended

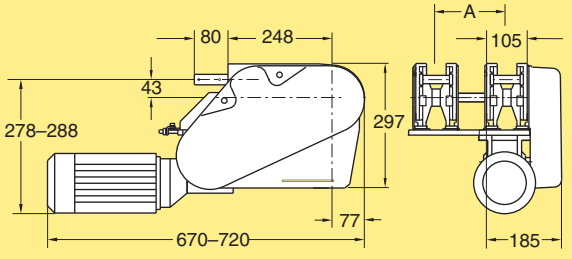

Double drive unit
Suspended motor
Fixed speed up to 60 m/min
Transmission on right side
A = 106 mm
Fixed speed*
Without motor (ISO)
Without motor (ANSI)

XHEB DD
XHEB 0 HRD106
XHEB 0 HRAD106

A = 150–350 mm
Without motor (ISO)
Without motor (ANSI)

XHEB 0 HRD–
XHEB 0 HRAD–

Maximum traction force: 1250 N. See page 22.
** Use online configurator when ordering.*
Effective track length: 0,80 m

 © FlexLink 2021

Intermediate drive units XH

Intermediate drive unit

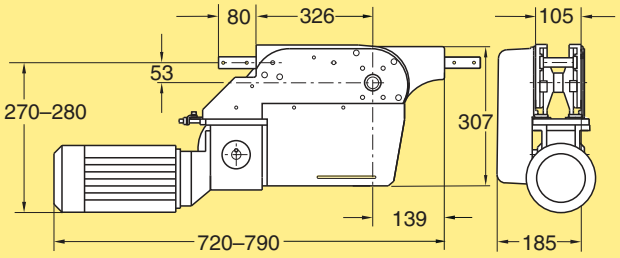

Intermediate drive unit
- Suspended motor
- Fixed speed up to 25 m/min
- Transmission on left side
- Fixed speed*
- Without motor (ISO)
- Without motor (ANSI)

XHER
XHER 0 HL
XHER 0 HLA

Maximum traction force: 200 N. See page 22.
** Use online configurator when ordering.*
Effective track length: 1,00 m

Intermediate drive unit

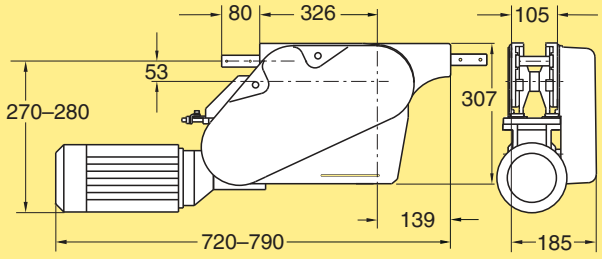

Intermediate drive unit
- Suspended motor
- Fixed speed up to 25 m/min
- Transmission on right side
- Fixed speed*
- Without motor (ISO)
- Without motor (ANSI)

XHER
XHER 0 HR
XHER 0 HRA

Maximum traction force: 200 N. See page 22.
**Use online configurator when ordering.*
Effective track length: 1,00 m

Catenary drive units XH

Catenary drive unit

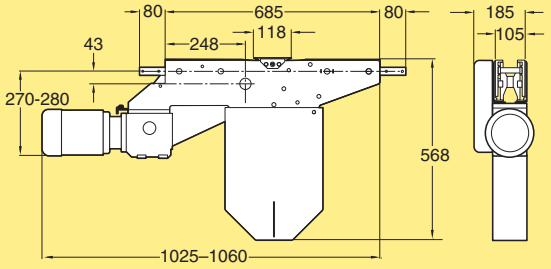

Catenary drive unit
- Suspended motor
- Fixed speed up to 25 m/min
- Transmission on left side
- Fixed speed*
- Without motor (ISO)
- Without motor (ANSI)

XHEC
XHEC 0 HL
XHEC 0 HLA

Maximum traction force: 1250 N. See page 22.
**Use online configurator when ordering.*
Effective track length: 1,35 m

Catenary drive unit

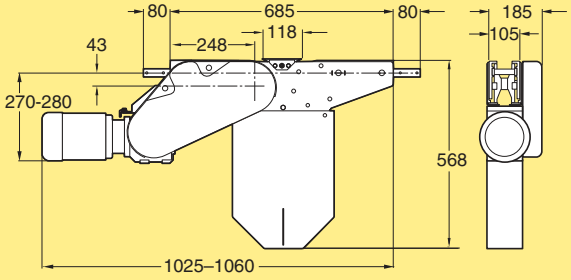

Catenary drive unit
- Suspended motor
- Fixed speed up to 25 m/min
- Transmission on right side
- Fixed speed*
- Without motor (ISO)
- Without motor (ANSI)

XHEC
XHEC 0 HR
XHEC 0 HRA

Maximum traction force: 1250 N. See page 22.
**Use online configurator when ordering.*
Effective track length: 1,35 m

Bend drive unit XH

Bend drive unit, 180°

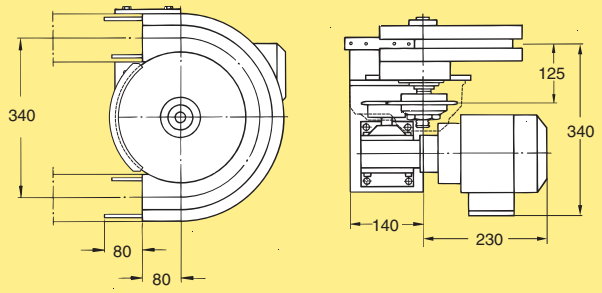

Bend drive unit, 180°
Fixed speed up to 30 m/min
Fixed speed*
Without motor (ISO) **XHEW 180/0 H**
Without motor (ANSI) **XHEW 180/0 HA**

Maximum traction force: 200 N. See page 22.
**Use online configurator when ordering.*
Effective track length: 0,65 m

Idler units XH

Idler end unit

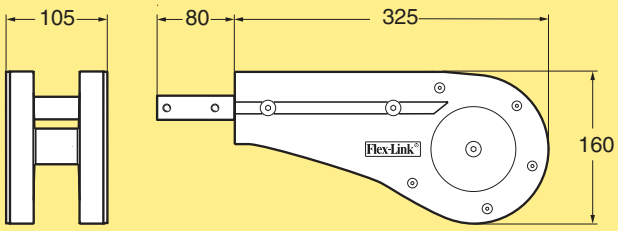

Idler end unit **XHEJ 325**

Effective track length: 0,80 m

Idler bend unit, 90°

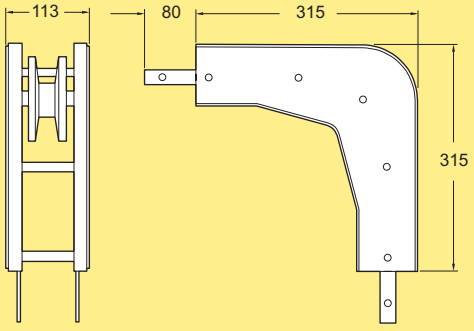

Idler bend unit, 90° **XHEK 90R50**

Effective track length: 0,65 m.
Note. Cannot be used with return chain.

Protective cover for idler end unit

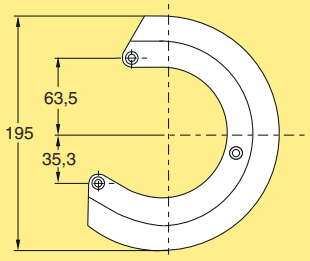

Protective cover for idler end unit **XHSJ 195**

 © FlexLink 2021

Passive bridge from conveyor to conveyor

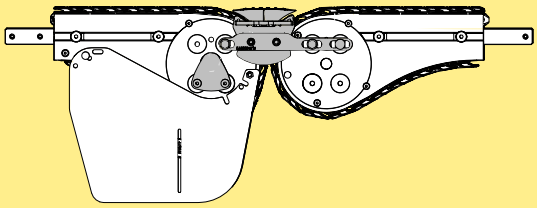

*Passive bridge** **XHNG**

From: *To:*
Heavy Drive Heavy Idler

** Use online configurator when ordering.*

Passive bridge to or from machine or application, Single or double rollers

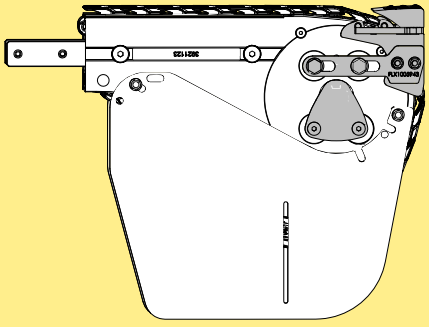

(1)

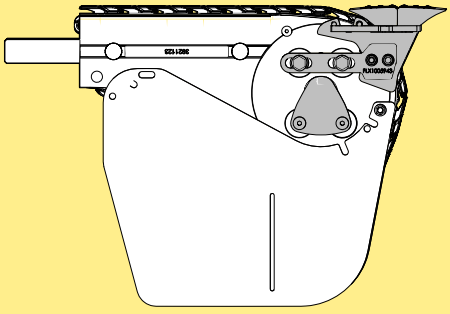

(2)

*Passive bridge**
Single roller (1) or Double roller (2) **XHNG**

From: *To:*
Heavy Drive External
External Heavy Idler

** Use online configurator when ordering.*

Attachment wire

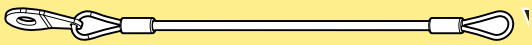

Wire for attaching roller to holder **FLX1006041**

**Also available as a configuration option through XHNG.*

Sensor Kit

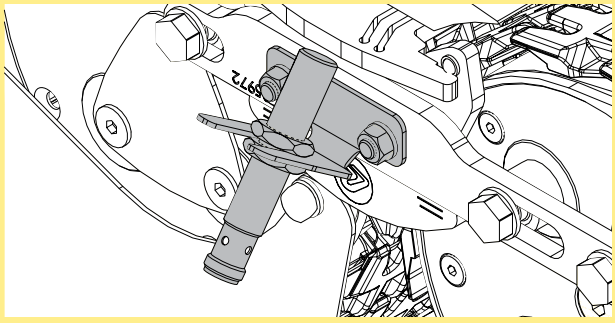

Bridge in position sensor kit
Conveyor to conveyor **FLX1006042**
External to/from Conveyor **FLX1006044**

**Also available as a configuration option through XHNG.*

**Note*
Bridges can not be used with cleated chain.

S-Transfer

S-Transfer

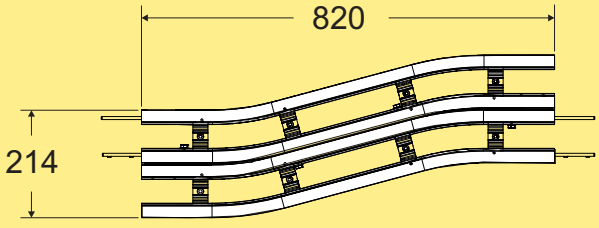

S-transfer for return chain
for XH **XHCY D**

Effective track length: 3,3 m

Wheel bend, 30°

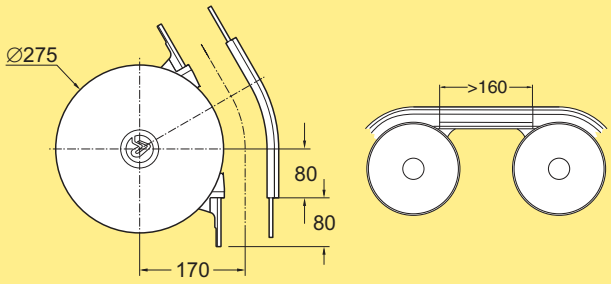

Wheel bend, 30° **XHBH 30R170 A**

Effective track length: 0,25 m 1-way (0,50 m 2-way)

Wheel bend, 45°

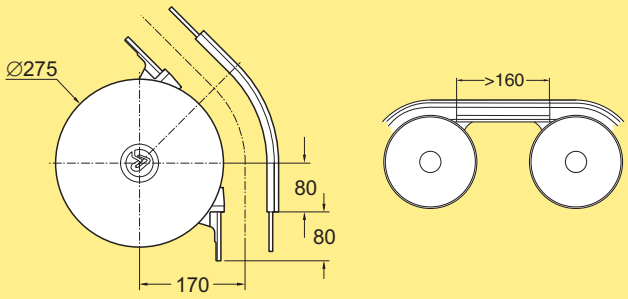

Wheel bend, 45° **XHBH 45R170 A**

Effective track length: 0,30 m 1-way (0,60 m 2-way)

Wheel bend, 90°

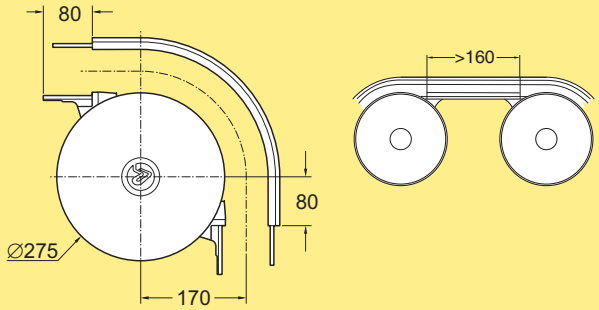

Wheel bend, 90° **XHBH 90R170 A**

Effective track length: 0,40 m 1-way (0,80 m 2-way)

Wheel bend, 180°

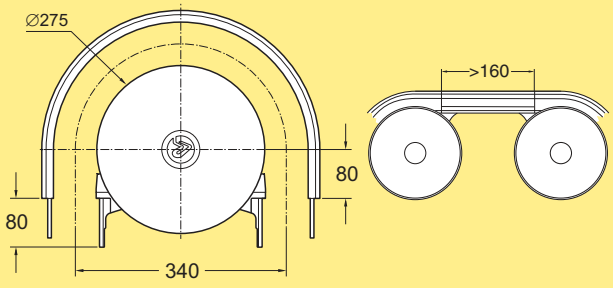

Wheel bend, 180° **XHBH 180R170 A**

Effective track length: 0,65 m 1-way (1,30 m 2-way)

Wheel bend, 210°

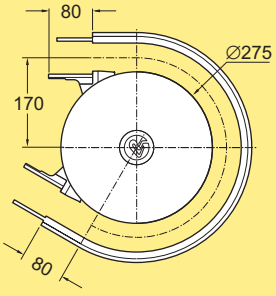

Wheel bend, 210° **XHBH 210R170 A**

Effective track length: 0,80 m 1-way (1,60 m 2-way)

Wheel bend, 30°–180°

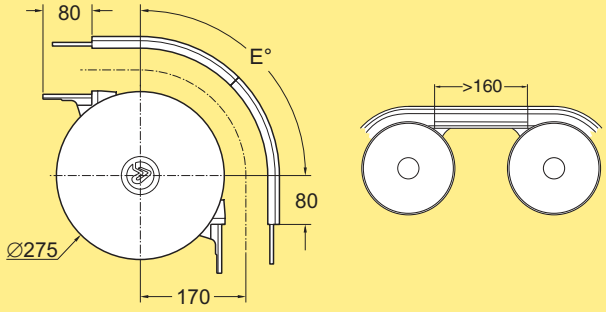

Wheel bend, 30°–180° **XHBH ER170 A**

The outer bend is cut in the middle to the desired angle and assembled using connecting strips. The angle "E" must be specified when ordering.

 © FlexLink 2021

Wheel cover for Wheel bend

Wheel cover for X65/XL, XT, X85, XH

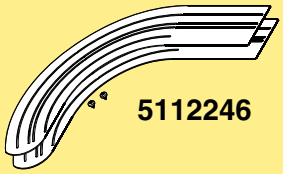

5112246

Wheel cover for X65/XL, XT, X85, XH (Including one pair of Wheel cover 5112244 and 2 tap screw ISO 7049 4,2x6,5-C-H-A2K) **5112246**

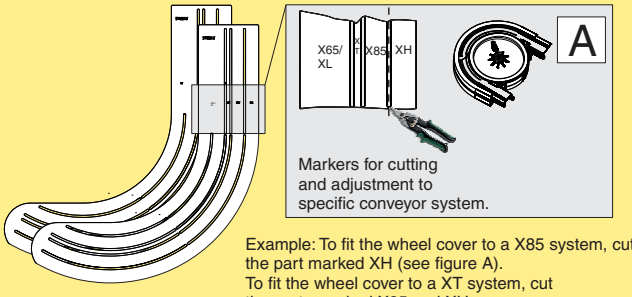

Example: To fit the wheel cover to a X85 system, cut the part marked XH (see figure A).
To fit the wheel cover to a XT system, cut the parts marked X85 and XH.

Plain bends XH

Plain bend, 30°

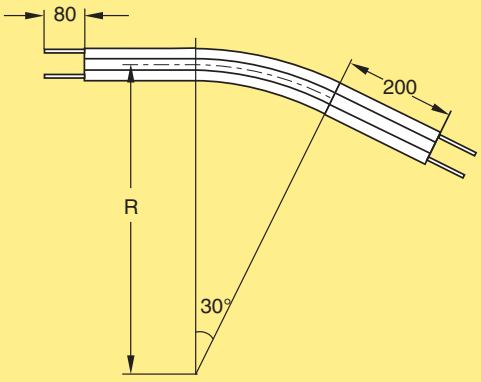

Plain bend, 30°±1°

R=500±10 mm	**XHBP 30R500**
R=700±10 mm	**XHBP 30R700**
R=1000±10 mm	**XHBP 30R1000**

Effective track lengths:
R500: 0,70 m 1-way (1,35 m 2-way)
R700: 0,80 m 1-way (1,55 m 2-way)
R1000: 0,95 m 1-way (1,85 m 2-way)

Plain bend, 60°

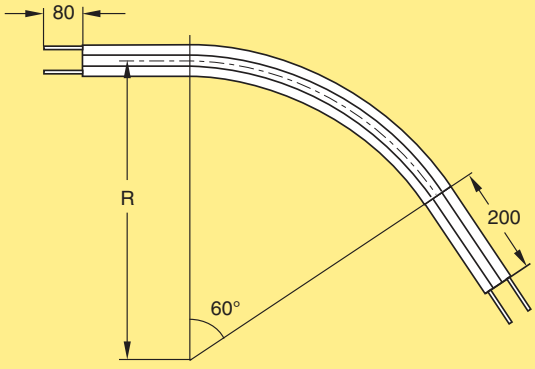

Plain bend, 60°±1°

R=500±10 mm	**XHBP 60R500**
R=700±10 mm	**XHBP 60R700**
R=1000±10 mm	**XHBP 60R1000**

Effective track lengths:
R500: 0,95 m 1-way (1,85 m 2-way)
R700: 1,15 m 1-way (2,30 m 2-way)
R1000: 1,45 m 1-way (2,90 m 2-way)

Plain bend, 45°

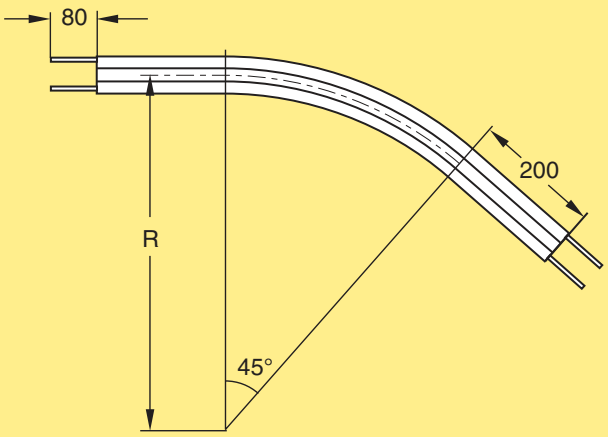

Plain bend, 45°±1°

R=500±10 mm	**XHBP 45R500**
R=700±10 mm	**XHBP 45R700**
R=1000±10 mm	**XHBP 45R1000**

Effective track lengths:
R500: 0,80 m 1-way (1,60 m 2-way)
R700: 0,95 m 1-way (1,90 m 2-way)
R1000: 1,20 m 1-way (2,40 m 2-way)

Plain bend, 90°

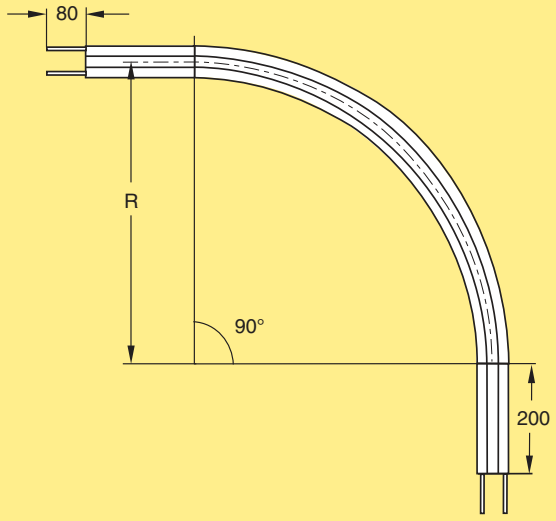

Plain bend, 90°±1°

R=500±10 mm	**XHBP 90R500**
R=700±10 mm	**XHBP 90R700**
R=1000±10 mm	**XHBP 90R1000**

Effective track lengths:
R500: 1,20 m 1-way (2,40 m 2-way)
R700: 1,50 m 1-way (3,00 m 2-way)
R1000: 2,00 m 1-way (3,95 m 2-way)

Support rail for plain bends XH

Support rail for plain bends

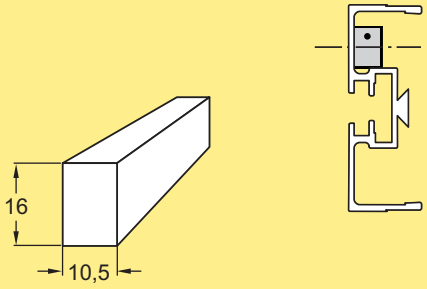

Support rail for plain bends, XH
Length 2,4 m **5048598**

Fix with sheet metal screw ISO 7049 4,2×9,5 or similar.
See page 521 for installation instructions.

 © FlexLink 2021

Vertical bend, 5°

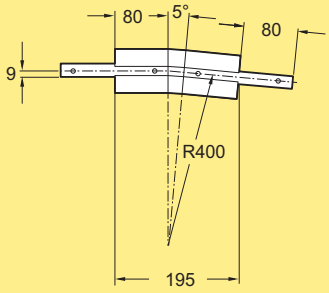

Vertical bend, 5° **XHBV 5R400**

Effective track length: 0,20 m 1-way (0,40 m 2-way)

Vertical bend, 7°

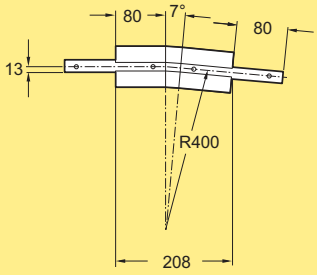

Vertical bend, 7° **XHBV 7R400**

Effective track length: 0,20 m 1-way (0,45 m 2-way)

Vertical bend, 15°

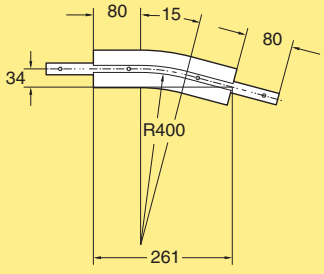

Vertical bend, 15° **XHBV 15R400**

Effective track length: 0,30 m 1-way (0,55 m 2-way)

Vertical bend, 30°

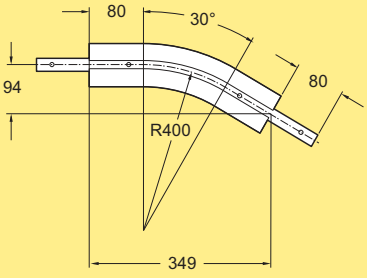

Vertical bend, 30° **XHBV 30R400**

Effective track length: 0,40 m 1-way (0,75 m 2-way)

Vertical bend, 45°

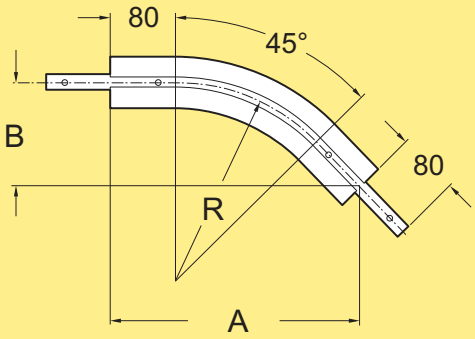

Vertical bend, 45°

R= 400, A=419, B=174 **XHBV 45R400**

R=1000, A=844, B=349 **XHBV 45R1000**

Effective track length:
R400: 0,50 m 1-way (0,95 m 2-way)
R1000: 0,95 m 1-way (1,90 m 2-way)

Vertical bend, 60°

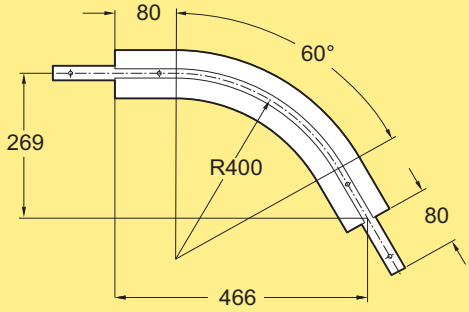

Vertical bend, 60° **XHBV 60R400**

Effective track length: 0,65 m 1-way (1,20 m 2-way)

Vertical bend, 90°

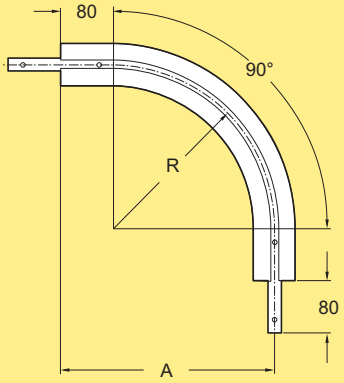

Vertical bend, 90°

R= 400, A= 480 **XHBV 90R400**

R=1000, A=1080 **XHBV 90R1000**

Effective track length:
R400: 0,85 m 1-way (1,60 m 2-way)
R1000: 1,75 m 1-way (3,50 m 2-way)

Vertical bend, 5°–90°

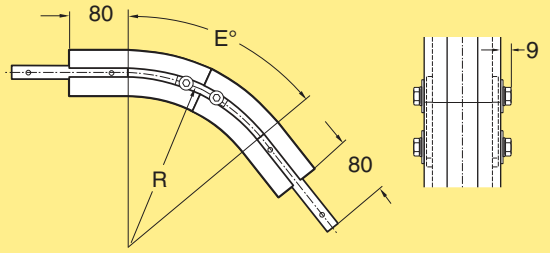

Vertical bend, 5°–90°
R=400
R=1000

XHBV ER400
XHBV ER1000

The bend is cut in the middle to the desired angle and assembled using connecting strips. The angle "E" must be specified when ordering.

Angle plates XH

Angle plate, straight

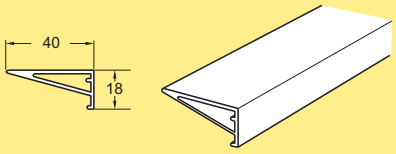

Angle plate
Length 3 m

XHRP 3

Angle plate for 90° bend

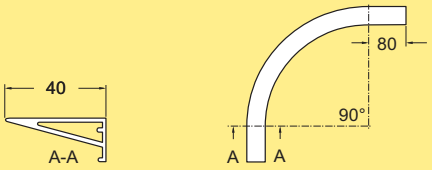

Angle plate for 90° bend
Used with XHBH 90R170
Inner radius 222,5 mm

XHRM 90

Angle plate for 180° bend

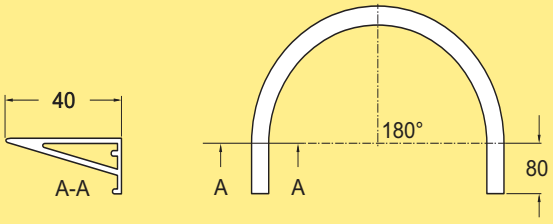

Angle plate for 180° bend
Used with XHBH 180R170 and XHEW 180/5 H
Inner radius 222,5 mm

XHRM 180

 © FlexLink 2021

Front piece

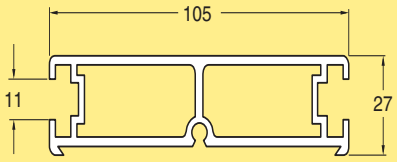

Front piece
Length 3 m

XHVF 3

Sliding strip for front piece

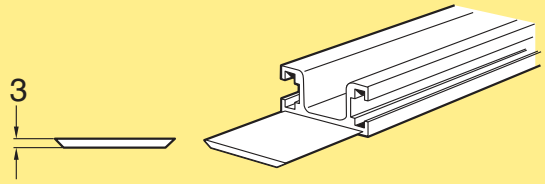

Sliding strip for front piece
Length 2 m

XHVG 2

Front piece upper bend

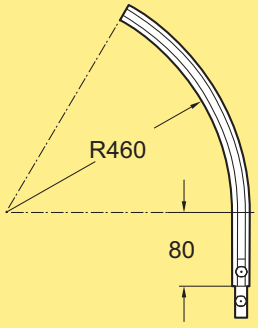

Upper bend, 60°

XHVA 60R460

Includes connecting strip with screws

Front piece lower bend

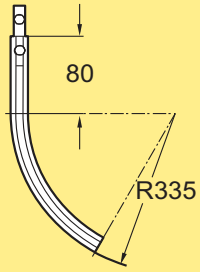

Lower bend, 60°

XHVB 60R335

Includes connecting strip with screws

Linkage kit for front piece

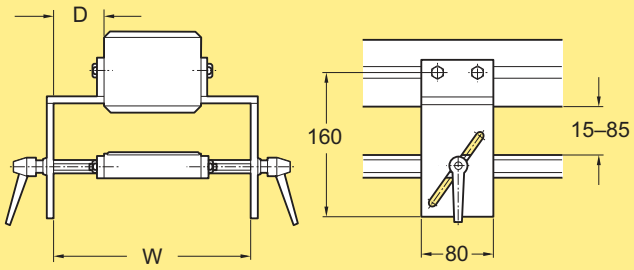

Linkage kit
W=190, D=43
W=290, D=93

XHVK 43
XHVK 93

Kit consists of two support pairs.

Bend support for front piece

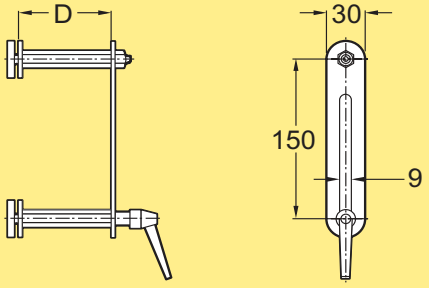

Bend support
D=43 mm
D=93 mm

XHVS 43
XHVS 93

Drip tray

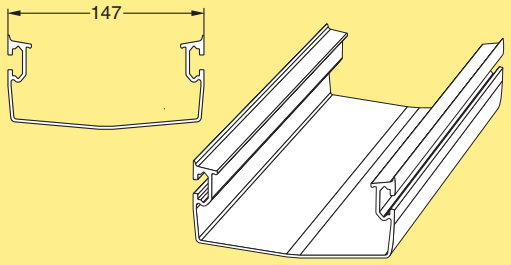

Drip tray
Length 3 m

XHDT 3×147 B

Drip tray bracket

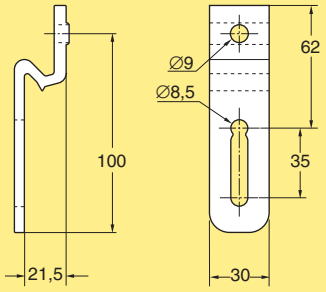

Drip tray bracket

XLDB 21×100

Connecting strip

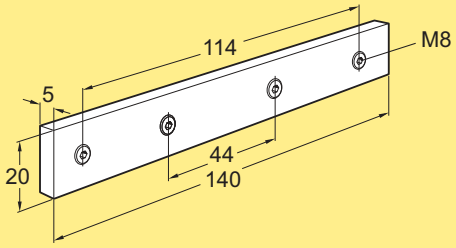

Connecting strip with set screws

XLCJ 5×140

Note. Contains 10 pcs.

 © FlexLink 2021

Drip catcher 53 mm

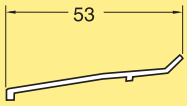

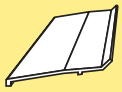

Drip catcher 53 mm
Length 3 m

XHDS 3×53

Drip catcher 83 mm

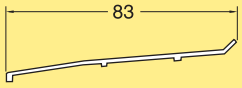

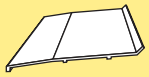

Drip catcher 83 mm
Length 3 m

XHDS 3×83

Drip catcher bracket assembly

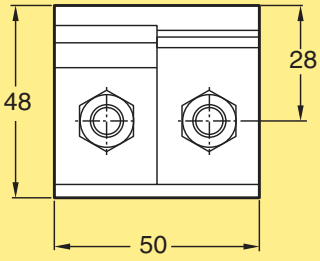

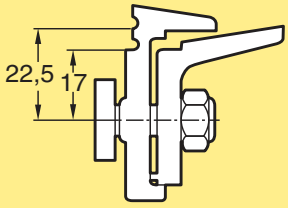

Drip catcher bracket assembly
Including T-bolts and nuts

XHDR 23

© FlexLink 2021