HIOKI

BT3564

Instruction Manual

BATTERY HiTESTER

The latest edition of the instruction manual

Read carefully before use.
Keep for future reference.

Safety Notes	▶ p.3	Maintenance and Service	▶ p.173
Names and Functions of Parts	▶ p.9	Troubleshooting	▶ p.173
Measurement	▶ p.21	Error Indication	▶ p.175

EN

Sept. 2024 Revised edition 3
BT3564A961-03

600518173

Contents

Introduction.....1
Verifying Package Contents.....2
Safety Notes.....3
Usage Notes.....4

Chapter 1 Overview 7

1.1 Product Overview.....7
1.2 Features.....8
1.3 Names and Functions of Parts.....9
1.4 Menu Display Sequence (SHIFT > ENTER).....13
1.5 Measurement Flowchart.....14

Chapter 2 Measurement Preparations 15

2.1 Preparation Flowchart.....15
2.2 Connecting the Power Cord.....16
2.3 Connecting the Optional Test Leads.....17
2.4 Turning the Power On and Off.....18
2.5 Selecting the Line Frequency.....20

Chapter 3 Measurement 21

3.1 Pre-Operation Inspection.....21
3.2 Basic Measurement Example.....22
3.3 Selecting Measurement Mode.....26
3.4 Setting Measurement Range.....27
- Resistance measurement range.....27
- Voltage measurement range.....28
- Auto-Ranging.....29

3.5 Setting Sampling Rate.....30
3.6 Zero-Adjust Function.....30
- Wiring Method for Zero-Adjustment.....30
- Executing Zero-Adjustment.....31

3.7 Displaying Measurement Results.....35
- Measurement Fault Detection.....36
- Overflow Display.....37

Chapter 4
Applied Measurement 39

4.1 Comparator Function 40
- Comparator Setting Example 1 (Upper and Lower Threshold Judgment) 41
- Comparator Setting Example 2 (Reference Value and Tolerance Judgment) 45
- Comparator Judgment Beeper Setting 50
- Comparator Mode Setting 50
- Comparator Threshold Method Selection 51
- Upper and Lower Thresholds Setting (by Reference Value and Tolerance) 52
- Configuring the Absolute Value Judgment Function (Voltage) 53
- Enabling and Disabling the Comparator Function 54
- Comparator Judgment Results 55
- Switching Between Measurement Value and Comparator Setting Displays 56

4.2 Trigger Function 57
- Trigger Source Settings 57
- Trigger Delay Settings 58

4.3 Averaging Function 59
4.4 Statistical Calculation Functions 60
4.5 Memory Function 64
4.6 Key-Lock Function 66
4.7 Panel Save Function 67
4.8 Panel Load Function 68
4.9 Self-Calibration 69
4.10 Measurement Value Output Function 70
4.11 Key Beeper Setting 71
4.12 Reset Function 72

Chapter 5
External Control (EXT I/O) 75

5.1 Overview 75
5.2 Signal Descriptions 76
- Pinout 76
- Input Signals 77
- Output Signals 78
- ERR Output 79
- Instrument Settings 80

5.3 Timing Chart 81
5.4 Internal Circuitry 83
- Electrical Specifications 84
- Connection Examples 84

5.5 External Control Q&A 86

Chapter 6
Printing 87

6.1 Connecting the Printer 87
- Connecting the PRINTER to the Instrument 88

6.2 Selecting the Interface 89

6.3 Printing 90

Chapter 7
Analog Output 93

7.1 Connecting Analog Output 93

7.2 Analog Output Specifications 94

Chapter 8
RS-232C/GP-IB Interfaces 95

8.1 Overview and Features 96

8.2 Specifications 97
- RS-232C Specifications 97
- GP-IB Specifications 97

8.3 Selecting the Connections and Protocol 98
- Attaching the Connector.... 98
- Selecting the Communication Conditions 100

8.4 Communication Methods 101
- Message Format 101
- Output Queue and Input Buffer.... 105
- Status Byte Register 106
- Event Registers.... 108
- Initialization Items.... 111
- Local Function.... 111

8.5 Message List 112
- Standard Commands 112
- Device-Specific Commands 113

8.6 Message Reference 118
- Standard Commands 119
- Device-Specific Commands 123
- Measurement Value Formats.... 151
- Compatible Command with the Model 3560 AC mΩ HiTESTER.... 152

8.7 Basic Data Importing Methods 157

8.8 Sample Programs 158
- To be prepared in Visual Studio® 2017.... 158
- Creation Procedure (Visual Basic® 2017).... 158
- Sample Programs (Visual Basic® 2017) 160
- Sample Programs (Visual C#® 2017) 162

Chapter 9 Specifications 165

9.1 General Specifications 165
9.2 Basic Specifications 166
9.3 Accuracy 168
9.4 Functions 170
9.5 External Interfaces 172

Chapter 10 Maintenance and Service 173

10.1 Troubleshooting 173
10.2 Cleaning 175
10.3 Error Indication 175

Appendix A 1

Appendix 1 Precautions for Making Custom Test Leads .....A 1
Appendix 2 AC Four-terminal Method .....A 4
Appendix 3 Measurement values when using four-terminal measurement (Differences in measurement values due to measurement leads used).....A 5
Appendix 4 Synchronous Detection System .....A 6
Appendix 5 Configuration and Extension of the Test Leads .....A 7
Appendix 6 Effect of Eddy Currents .....A 8
Appendix 7 Calibration Procedure.....A 9
Appendix 8 Zero Adjustment.....A 10
Appendix 9 Test Lead Options.....A 15
Appendix 10 Rack Mounting.....A 17
Appendix 11 Dimensional Diagram.....A 19

Index Index 1

Introduction

Thank you for purchasing the Hioki Model BT3564 Battery HiTester. To obtain maximum performance from the instrument, please read this manual first, and keep it handy for future reference.
Be sure to also read the separate document "Operating Precautions" before use.

Target audience

This manual has been written for use by individuals who use the product in question or who teach others to do so. It is assumed that the reader possesses basic electrical knowledge (equivalent to that of someone who graduated from the electrical program at a technical high school).

Trademarks

Microsoft, Windows, Visual Studio, Visual Basic, and Visual C# are either registered trademarks or trademarks of Microsoft Corporation in the United States and other countries.

Verifying Package Contents

When you receive the instrument, inspect it carefully to ensure that no damage occurred during shipping. In particular, check the accessories, panel switches, and connectors. If damage is evident, or if it fails to operate according to the specifications, contact your authorized Hioki distributor or reseller.
Use the original packing materials when transporting the instrument, if possible.

Confirm that these contents are provided. (One each)

☐ Model BT3564 Battery HiTester

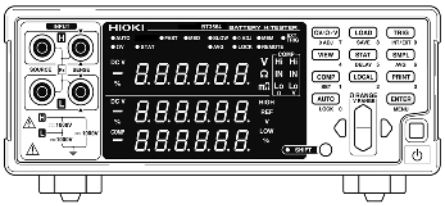

☐ Power Cord

☐ Instruction Manual
(This document)

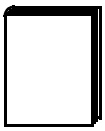

☐ Operating Precautions
(0990A903)

Options

The following options are available for the instrument. Contact your authorized Hioki distributor or reseller when ordering.
The options are subject to change. Visit our website for updated information.

Safety Notes

This manual contains information and warnings essential for safe operation of the instrument and for maintaining it in safe operating condition. Before using it, be sure to carefully read the following safety precautions.

	In the manual, the ⚠ symbol indicates particularly important information that the user should read before using the instrument.
⚠	The ⚠ symbol printed on the instrument indicates that the user should refer to a corresponding topic in the manual (marked with the ⚠ symbol) before using the relevant function.
🚫	Indicates a prohibited action.
(⇒.p)	Indicates the location of reference information.
?	Indicates quick references for operation and remedies for troubleshooting.
*	Indicates that descriptive information is provided below.

Screen display

The screen of this instrument displays characters in the following manner.

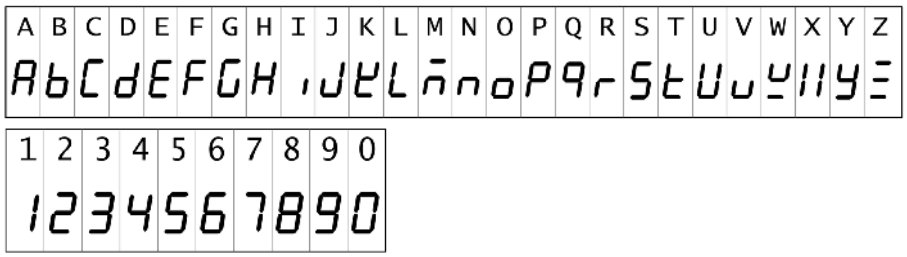

Accuracy

We define measurement tolerances in terms of f.s. (full scale), rdg. (reading) and dgt. (digit) values, with the following meanings:

f.s. (maximum display value)
The maximum displayable value. This is usually the name of the currently selected range.

rdg. (reading or displayed value)
The value currently being measured and indicated on the measuring instrument.

dgt. (resolution)
The smallest displayable unit on a digital measuring instrument, i.e., the input value that causes the digital display to show a "1" as the least-significant digit.

Usage Notes

Follow these precautions to ensure safe operation and to obtain the full benefits of the various functions.

⚠ DANGER

To avoid electric shock, do not remove the instrument's case. The internal components of the instrument carry high voltages and may become very hot during operation.

NOTE

Avoid using near electrically noisy devices, as the noise may impinge upon the test object and cause unreliable measurements.

Installation Precautions

- The instrument should be operated only with the bottom downwards.
- Do not place the instrument on an unstable or slanted surface.

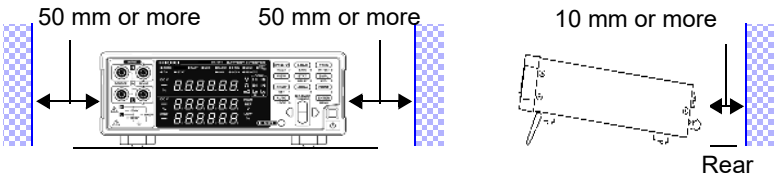

The instrument can be used with the stand. (⇒ p.12)
It can also be rack-mounted. Appendix (⇒ p.A17)

Preliminary Checks

Before using the instrument the first time, verify that it operates normally to ensure that the no damage occurred during storage or shipping. If you find any damage, contact your authorized Hioki distributor or reseller.

⚠WARNING

Before using the instrument, make sure that the insulation on the power cord and test leads is undamaged and that no bare conductors are improperly exposed. Using the instrument in such conditions could cause an electric shock, so contact your authorized Hioki distributor or reseller for replacements.

Measurement Precautions

⚠DANGER

- To avoid electrical shock, be careful to avoid shorting live lines with the test leads.
- To avoid injury or damage to the instrument, do not attempt to measure AC voltage and AC current, or DC voltage exceeding ± 1000 V DC.
- The maximum rated voltage between input terminals and ground is ± 1000 V DC. Attempting to measure voltages exceeding ±1000 V DC with respect to ground could damage the instrument and result in personal injury.
- Never connect a battery cell or module to a motor or other load while it is being measured. Doing so may result in a surge voltage, which may damage the instrument or cause injury.

⚠WARNING

- To prevent electrical shock, verify the ratings of the measurement leads before measurement and exercise care not to measure voltages that exceed those ratings.
- Do not touch the metallic tip of probes after measuring high-voltage batteries. Doing so may result in electrical shock since internal instrument components could retain a charge under those conditions. (Internal discharge time: Approx. 20 sec.)
- To avoid short-circuit accidents, connect the probe's banana terminals to the instrument before connecting the probes to the battery.

NOTE

- Use only the specified test leads and cables. Using a non-specified cable may result in incorrect measurements due to poor connection or other reasons.
- To ensure certified measurement accuracy, allow at least 30 minutes warm-up. After warm-up, be sure to execute self-calibration.
  See "4.9 Self-Calibration" (⇒ p.69).
- The input circuitry includes a protective fuse. Measurement is not possible when the fuse is blown.
- This instrument internally stores (backs up) all settings (except memory function and measurement values), such as measurement range, comparator settings and etc., but only when no operation is performed for a certain time. Therefore, to preserve settings, do not turn the power off for a short time (about five seconds) after changing a setting. However, measurement settings made through the RS-232C or GP-IB interface and measurement settings loaded by LOAD signals of the EXT I/O connector are not memorized.
- Select an appropriate measurement range when measuring batteries. Using a low range such as 3 mΩ to measure a button cell or other battery that has high internal resistance may result in an open-terminal voltage (approx. 4 V), causing the battery to be charged.

Before Connecting and Powering On

⚠WARNING

- Before turning the instrument on, make sure the power supply voltage matches that indicated on the its power connector. Connection to an improper power supply voltage may damage the instrument and present an electrical hazard.
- To avoid electrical accidents and to maintain the safety specifications of this instrument, connect the power cord provided only to a 3-contact (two-conductor + ground) outlet.

NOTE

To suppress noise, the instrument needs to be set to match the frequency of the power source. Before operating, set the instrument to the frequency of your commercial power. If the power supply frequency is not set properly, measurements will be unstable.
See "2.5 Selecting the Line Frequency" (⇒ p.20).
Make sure the power is turned off before connecting or disconnecting the power cord.

Handling the Instrument

⚠CAUTION

- To avoid damage to the instrument, protect it from physical shock when transporting and handling. Be especially careful to avoid physical shock from dropping.
- Do not apply heavy downward pressure with the stand extended. The stand could be damaged.

NOTE

This instrument may cause interference if used in residential areas. Such use must be avoided unless the user takes special measures to reduce electromagnetic emissions to prevent interference to the reception of radio and television broadcasts.

Handling the Test Leads and Cables

⚠CAUTION

- To avoid breaking the test leads and cables, do not bend or pull them.
- Avoid stepping on or pinching cables, which could damage the cable insulation.

Overview Chapter 1

1.1 Product Overview

The Model BT3564 Battery HiTester measures battery internal resistance using a four-terminal, 1-kHz AC method, while simultaneously measuring DC voltage (electromotive force [emf]). The high-precision, fast measurement performance and extensive interface capabilities make these models ideal for incorporating into battery testing production lines.

1.2 Features

Simultaneously Measures Battery Internal Resistance and Voltage

The four-terminal AC method measures resistance and DC voltage simultaneously, so battery internal resistance and emf are measured and judged at once.

High-precision Measurements

The instrument provides high-resolution resistance (0.1 μΩ) and voltage measurements (10 μV). High precision (± 0.01% rdg.) ensures accurate voltage measurements.

High-speed Measurements

Simultaneous resistance and voltage measurements can be performed as fast as once every 28 ms.
(Sampling time of approx. 28 ms)

High-voltage measurement

The Model BT3564 supports measurement of high-voltage batteries of up to 1000 V.

Comparator Functions

Resistance and voltage measurement values are judged in three categories (Hi, IN, and Lo), with results clearly displayed. A comparator judgment beeper also provides distinct sounds to indicate pass/fail judgments and to facilitate correct recognition of judgment results.

Statistical Calculation Functions

Maximum, minimum, and average of the measurement values, standard deviation, process capability indices and other values can be automatically calculated for applications such as production management. Calculation results can also be applied as comparator setting values.

Measurement Value Memory Function

The instrument includes a Memory function and storage capacity for up to 400 pairs of measurement values. When making many sequential measurements at high speed and sending the measured values to a PC after each measurement, the time to switch test objects can become unsatisfactorily long. The Memory function can avoid the slow-down by sending stored measurements in batches during idle times.

EXT I/O Interface

EXT I/O and RS-232C interfaces are equipped as standard, supporting transfer rates up to 38,400 bps. Model BT3564 also supports GP-IB and analog output.

Printing Measurement Values and Statistical Results

Connect the printer to print measurement values and statistical calculation results.

1.3 Names and Functions of Parts

Front Panel

Input Terminals (INPUT)
Connect the optional test leads.
See "2.3 Connecting the Optional Test Leads" (⇒ p.17)

Main display
(⇒ p.10)

Operating keys
(⇒ p.11)

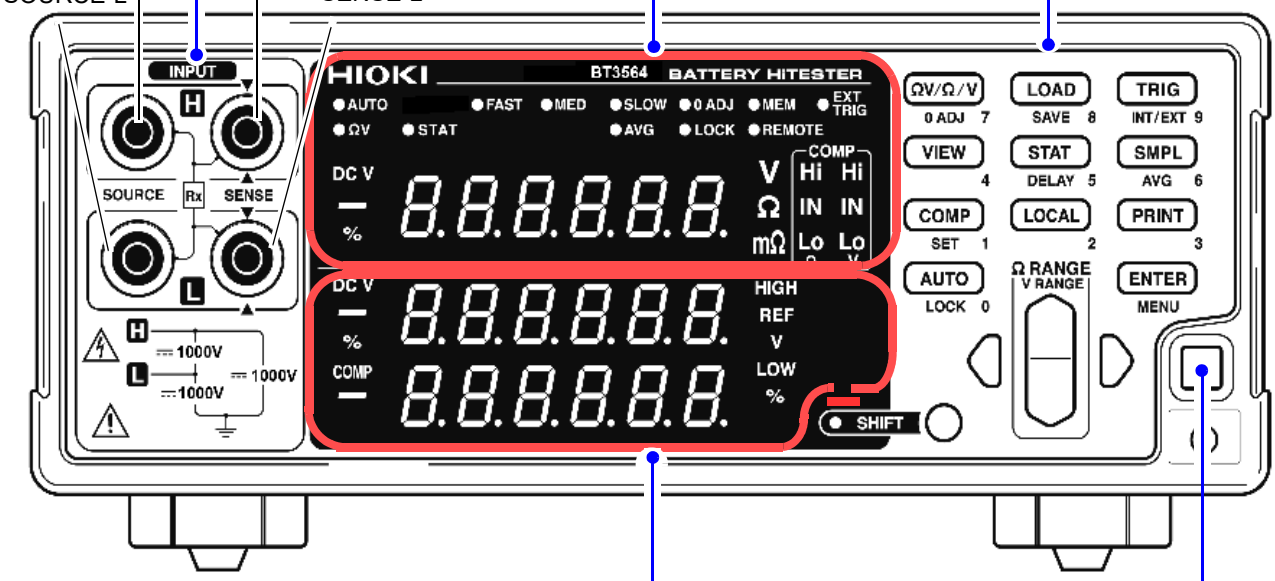

Sub display
(⇒ p.10)

POWER Switch
Turns the instrument on and off (Standby).
Turns the power on and off (standby).
Off (standby): On (cancel standby)
On (press and hold for 1 second): Off (standby)
(The main power switch is located on the back of the instrument.)
See "2.4 Turning the Power On and Off" (⇒ p.18)

Main display

The current measurement mode is indicated while measuring, and the setting item is displayed while making settings.

(Upper row)

AUTO	Lit when measuring with Auto-Ranging.
FAST, MED, SLOW	The selected Sampling Rate is lit.
0 ADJ	Lit when measuring in a range for which Zero-Adjustment has been performed.
MEM	Lit when the Memory function is enabled.
EXT TRIG	Lit when the External Trigger function is enabled.

(Lower row)

ΩV	Lit when the ΩV (Resistance and Voltage measurement) mode is selected.
STAT	Lit when the Statistical Calculation function is enabled.
AVG	Lit when measuring with the Averaging setting enabled.
LOCK	Lit when the keys are locked.
REMOTE	Lit during communications.

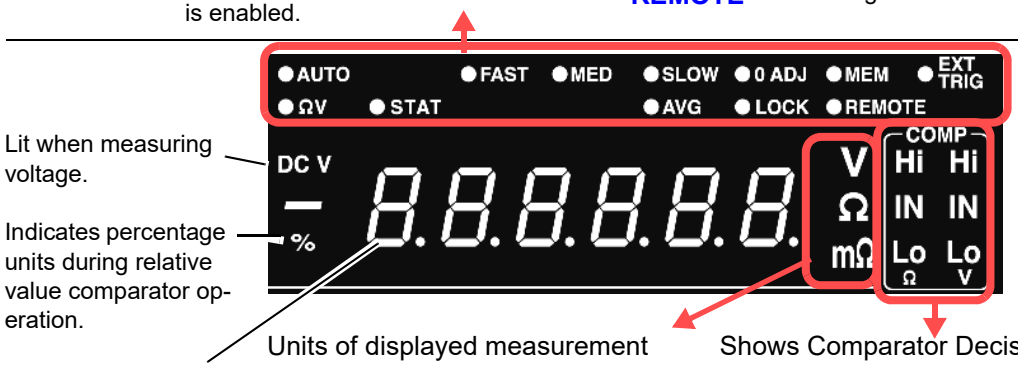

Units of displayed measurement

V	Unit of voltage
Ω	Unit of resistance (lit when the 3 Ω to 3000 Ω range is selected)
mΩ	Unit of resistance (lit when the 3 mΩ to 300 mΩ range is selected)

Shows Comparator Decision Result.

Hi	Indicates that the measured value is above the upper threshold.
IN	Indicates that the measured value is between the upper and lower thresholds.
Lo	Indicates that the measured value is below the lower threshold.

Sub display

Upper and lower thresholds and other settings are displayed (when set).

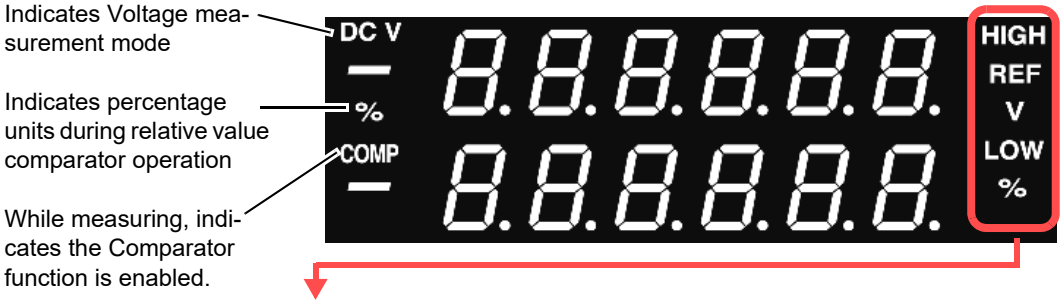

HIGH, LOW	Indicates that absolute value comparator operation is enabled (while measuring), and also when setting.
REF, %	Indicates that relative value comparator operation is enabled (while measuring), and also when setting.
V	Indicates the measured voltage value unit.

Operating keys

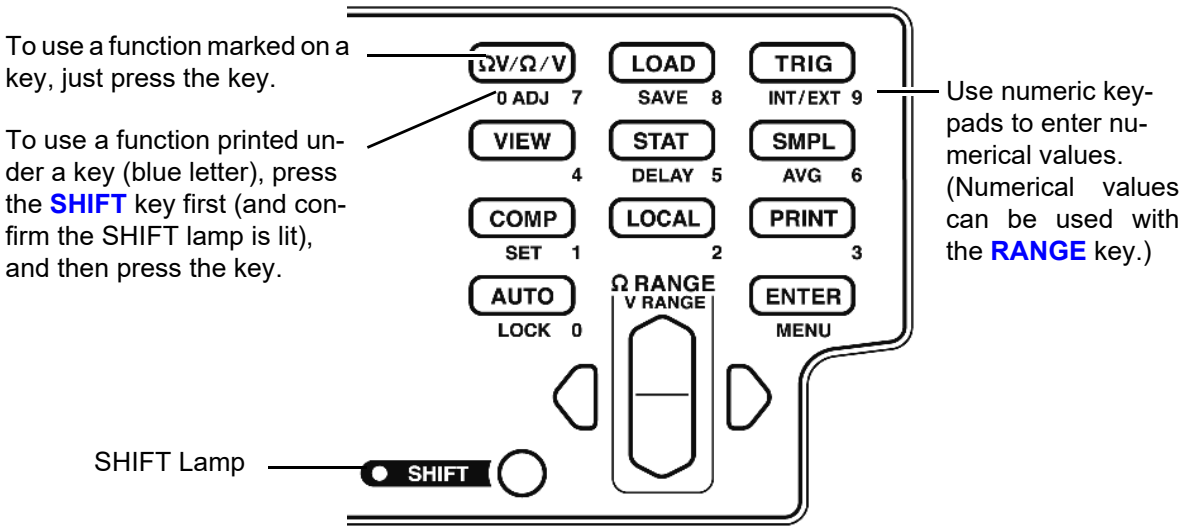

[ ]: Enabled after pressing the **SHIFT** key (SHIFT lamp lit).

Operating Key	Description
ΩV/ Ω/ V	Selects Measurement mode. (Resistance and voltage measurement, Resistance measurement or Voltage measurement)
[0 ADJ]	Executes Zero-Adjustment.
LOAD	Loads a saved measurement configuration (Panel settings).
[SAVE]	Saves the current measurement configuration (Panel settings).
TRIG	Executes a Manual Trigger event.
[INT/EXT]	Selects internal/external triggering.
VIEW	Switches the view mode of the ΩV mode.
STAT	Displays and sets Statistical Calculation results.
[DELAY]	Sets the Trigger Delay.
SMPL	Selects the Sampling Rate.
[AVG]	Activates Averaging function settings.
COMP	Switches the Comparator function on and off.
[SET]	Activates Comparator function setting.
LOCAL	Cancels remote control (RMT) and re-enables key operations.

Operating Key	Description
PRINT	Sends measurement values and statistical calculation results to the printer.
AUTO	Switches between the auto-ranging and manual range selection.
[LOCK]	Switches the Key-Lock function on and off.
ENTER	Applies the settings.
[MENU]	Selects various operating functions and settings.
Ω RANGE	Up/Down: Changes setting value or numerical value, and sets the resistance measurement range. Left/Right: Moves the setting item or digit.
[V RANGE]	Up/Down: Sets voltage measurement range.
SHIFT	• Enables the functions of the operating keys marked in blue. The lamp is lit when the SHIFT state is active. • Cancels settings in various setting displays. (Returns to the Measurement display without applying settings.) However, this does not apply to Menu display. However, from a menu item display, changed settings are not canceled, but accepted as the display returns to measurement display (except after Zero-Adjustment clear or resetting).

Rear Panel

RS-232C Connector
Connect here when using RS-232C interface or the printer.
See " Attaching the Connector" (⇒ p.98).

Serial Number
The serial number consists of 9 digits. The first two (from the left) indicate the year of manufacture, and the next two indicate the month of manufacture.Required for production control. Do not peel off the label.

Power Inlet
Connect the supplied power cord here.
See "2.2 Connecting the Power Cord" (⇒ p.16).

Main power switch
◎: Main power off
❙ :Main power on
See "2.4 Turning the Power On and Off" (⇒ p.18)

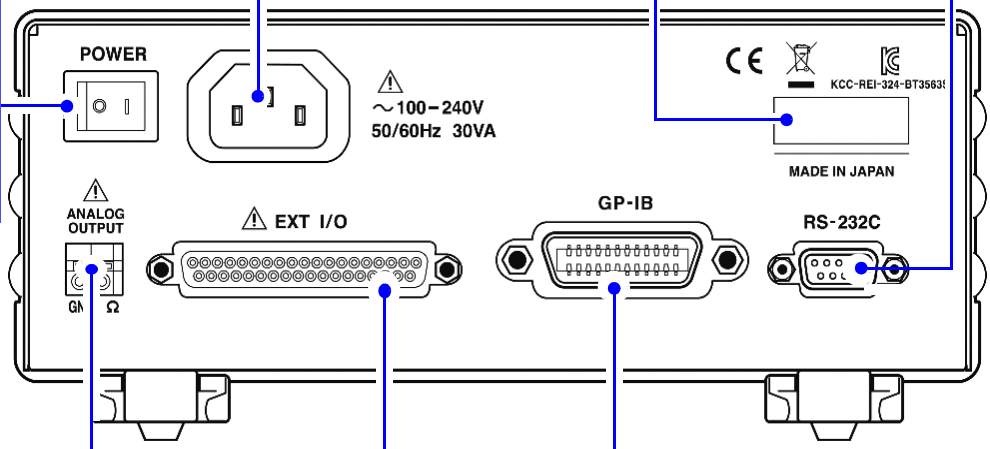

Analog output connector
Connect when using analog output measured resistance value.
See "Chapter 7 Analog Output" (⇒ p.93)

GP-IB Connector
Connect here to use the GP-IB interface.
See " Attaching the Connector" (⇒ p.98).

EXT I/O Connector
Connect here to use the EXT I/O interface.
See "Chapter 5 External Control (EXT I/O)" (⇒ p.75)

Side View

Stand
Can be opened to tilt the front panel upwards.

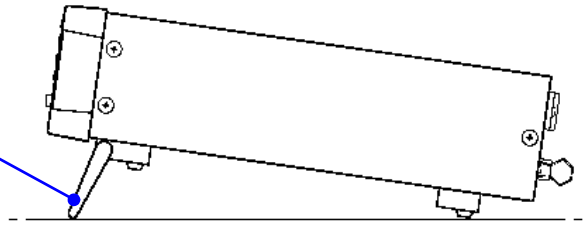

⚠CAUTION

Do not apply heavy downward pressure with the stand extended. The stand could be damaged.

1.4 Menu Display Sequence (SHIFT > ENTER)

Various auxiliary settings can be performed from the menu item displays.

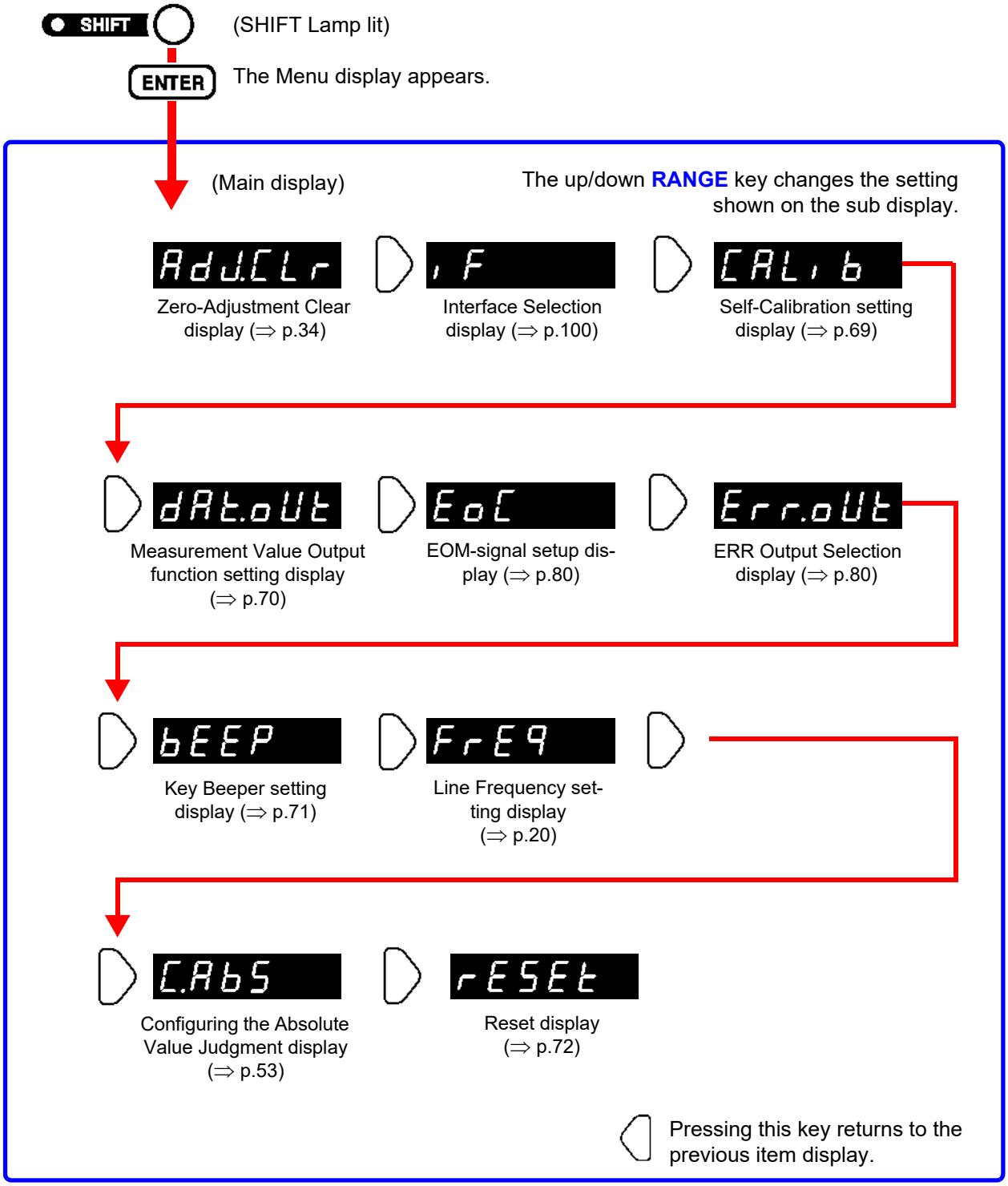

NOTE Settings on the menu item displays are applied and saved internally when changed.

1.5 Measurement Flowchart

The basic measurement process flow is as follows:

Measurement Preparations

Connecting the power cord (⇒ p.16)

↓

Connecting the test leads (⇒ p.17)

↓

Turning the power on (⇒ p.18)

↓

Selecting the line frequency (⇒ p.20)

Instrument's Settings

Selecting measurement mode (⇒ p.26)

↓

Setting measurement range (⇒ p.27)

↓

Setting sampling rate (⇒ p.30)

Zero-Adjustment

Short-circuiting the test leads together (⇒ p.31)

↓

Executing zero-adjustment

Measurement Start

Connecting the test leads to a test object.

↓

Reading the measured value (⇒ p.35)

For details about the functions that can be applied to measurement values such as comparator, trigger and averaging functions, refer to "Chapter 4 Applied Measurement" (⇒ p.39).

Measurement Preparations

Chapter 2

2.1 Preparation Flowchart

This procedure describes instrument preparations such as making connections and turning power on.

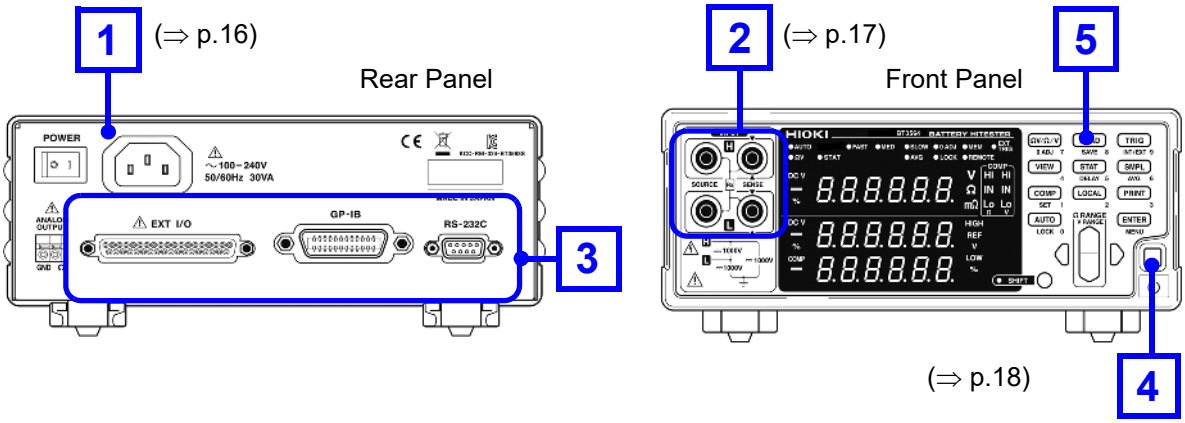

1 Connecting the power cord (⇒ p.16)

↓

2 Connecting the test leads to the instrument (⇒ p.17)

↓

3 Connecting the EXT I/O connector and interface connector (⇒ p.98)

↓

4 Turning the power on (⇒ p.18)

↓

5 Seting the measurement settings (⇒ p.21)

↓

6 Starting a measurement

NOTE Verify that the instrument's line frequency is correctly set when using it for the first time and after initialization following repair or recalibration.
See "2.5 Selecting the Line Frequency" (⇒ p.20).

2.2 Connecting the Power Cord

⚠WARNING

To avoid electrical accidents and to maintain the safety specifications of this instrument, connect the power cord provided only to a 3-contact (two-conductor + ground) outlet.

⚠CAUTION

To avoid damaging the power cord, grasp the plug, not the cord, when unplugging it from the power outlet.

NOTE

To eliminate noise, the instrument needs to be set to match the line frequency. Before operating, set the instrument to the frequency of your commercial power. If the power supply frequency is not set properly, measurements will be unstable.
See "2.5 Selecting the Line Frequency" (⇒ p.20).
Make sure the power is turned off before connecting or disconnecting the power cord.

Rear Panel

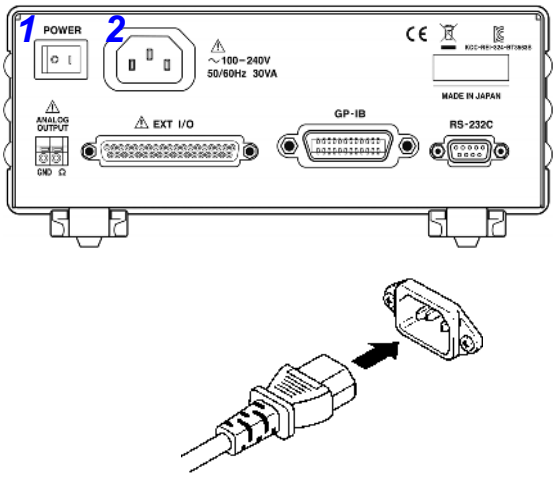

1. Confirm that the instrument's main power switch (rear panel) is off (○).

2. Check that the power supply voltage (100 V to 240 V) is correct, and connect the power cord to the power inlet socket on the rear of the instrument.

3. Plug the power cord into the AC outlet.

2.3 Connecting the Optional Test Leads

⚠WARNING

- To prevent an accident caused by short-circuiting the battery, be sure to verify that nothing is connected to the tips of the measurement leads before connecting the leads to or disconnecting them from the instrument. (Contact between the banana terminals while the tips of the measurement leads are connected to the battery will short-circuit the battery, possibly resulting in serious injury.)
- To prevent electrical shock, verify the ratings of the measurement leads before measurement and exercise care not to measure voltages that exceed those ratings.

Test leads are not included as standard accessories with the instrument, so the appropriate options need to be purchased separately or constructed according to the user's application requirements. To construct custom test leads, refer to "Precautions for Making Custom Test Leads"(⇒ p.A1). The resistance measurement terminals on the instrument consist of four separate banana jacks.

See "Appendix 1 Precautions for Making Custom Test Leads"(⇒ p.A1).

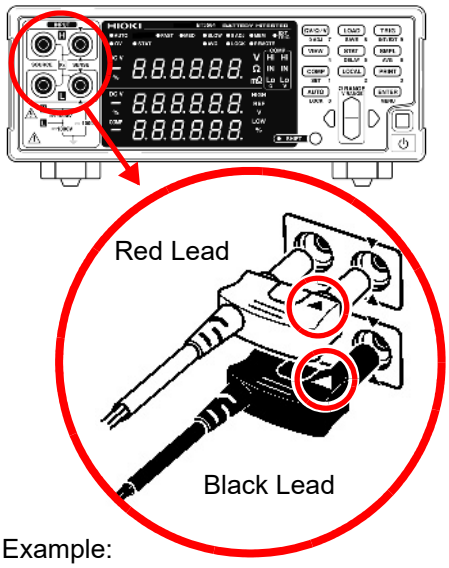

Example:
Optional model L2107 Clip Type Leads

1. Confirm that the instrument's Power switch is off.
2. Verify that nothing is connected to the tips of the four-terminal measurement leads.
3. Connect four-terminal test leads such as the L2107 Clip Type Leads to the input terminal.

Plug the ▲ mark on the red lead into the red ▲ marked jack on the instrument, and plug the ▲ mark on the black lead into the black ▲ marked jack on the instrument.

About Test Leads

(Example: Model L2107 Clip Type Leads)

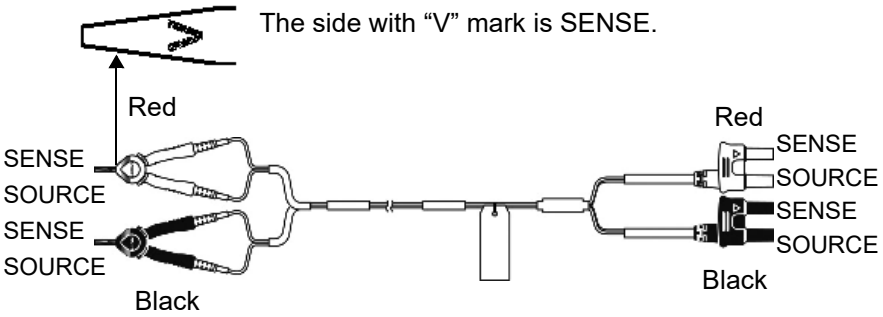

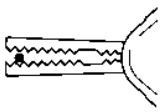

When clipping a thin line (Clip the line at the tip, serrated part of the jaws.)

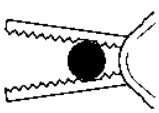

When clipping a thick line (Clip the line at the deep, non-serrated part of the jaws.)

2.4 Turning the Power On and Off

⚠WARNING

Before turning the instrument on, make sure the power supply voltage matches that indicated on the its power connector. Connection to an improper power supply voltage may damage the instrument and present an electrical hazard.

NOTE

- The measurement setting state is the same as when the power was previously turned off (backup).
  To preserve changes to settings, wait a short time (about five seconds) after changing a setting before turning power off.
- However, measurement settings made through the RS-232C or GP-IB interface and measurement settings loaded by $\overline{\text{LOAD}}$ signals of the EXT I/O connector are not memorized.
- Before starting to measure, allow 30 minutes for warm-up.
  After warm-up, be sure to perform a self-calibration.
  See "4.9 Self-Calibration" (⇒ p.69).

Turning On the Main Power Switch (Rear of the Instrument)

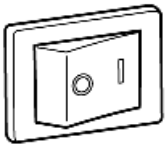

Power on

Turn on (❙) the main switch on the rear of the instrument.
The instrument will start up in the standby state in which it was last turned off. (The instrument is shipped in the standby state.)

Turning the Power Off

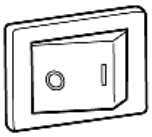

Power off

Turn off the main power switch on the rear of the instrument (○).

Cancelling the Standby State

Press the power switch on the front of the instrument while it is in the standby state.

(Main display)
Model name

(Main display)
Software version

(Sub display)
Line frequency

Interface

The measurement display appears.

Placing the Instrument in the Standby State

Press and hold the power switch on the front of the instrument for approximately 1 second while it is in the operating state.

2.5 Selecting the Line Frequency

The instrument's power supply frequency must be set in order to eliminate noise.
Although the power supply frequency setting is configured automatically ("AUTO") by default, it can also be set manually. Measured values will not be stable if the power supply frequency is not set properly.

1 SHIFT → ENTER (MENU)

(The SHIFT indicator lights up.)

The Menu display appears.

(Main display)

(Sub display)

2

Select the line frequency setting display.
See "1.4 Menu Display Sequence (SHIFT > ENTER)" (⇒ p.13).

(Main display)

(Sub display)

3

Select the frequency of the AC mains supply being used.

(Main display)

(Sub display) flashing

AUTO .... Automatic configuration of power supply frequency

50 ..... 50 Hz
60 ..... 60 Hz

4 ENTER

Applies the settings and returns to the measurement display.

NOTE

- When set to automatic configuration (AUTO), a power supply frequency of either 50 Hz or 60 Hz will be automatically detected whenever the instrument is turned on or reset.
- Changes in the power supply frequency occurring at other times will not be detected.
- The power supply frequency will be set to either 50 Hz or 60 Hz, whichever is closer.

Measurement Chapter 3

Before starting measurement, please read "Usage Notes" (⇒ p.4) and "Chapter 2 Measurement Preparations" (⇒ p.15).

⚠DANGER

- To avoid electrical shock, be careful to avoid shorting live lines with the test leads.
- To avoid injury or damage to the instrument, do not attempt to measure AC voltage and AC current, or DC voltage exceeding ±1000 V DC.
- The maximum rated voltage between input terminals and ground is ±1000 V DC. Attempting to measure voltages exceeding ±1000 V DC with respect to ground could damage the instrument and result in personal injury.

⚠WARNING

To prevent electrical shock, verify the ratings of the measurement leads before measurement and exercise care not to measure voltages that exceed those ratings.

3.1 Pre-Operation Inspection

Before using the instrument for the first time, verify that it operates normally to ensure that no damage occurred during storage or shipping. If you find any damage, contact your authorized Hioki distributor or reseller.

Before using the instrument, perform the following inspection to ensure that it is operating properly.

Check Point	Check Contents
Instrument Chassis (both front and rear panels)	• No damage or cracks • No internal circuitry is exposed
Test Leads and Power Cord	• Metal parts that should be insulated are not exposed
Good Test Sample	• Measures as good and displays the correct measurement value
Bad Test Sample	• Measures as bad and displays the correct measurement value

3.2 Basic Measurement Example

The following example describes the measurement process.

Example: Measuring resistance and voltage of a 30 mΩ lithium-ion battery

Required items:	Lithium-ion battery (30 mΩ) Test leads: Model 9770 Pin Type Lead are used here.
Measurement conditions:	Measurement mode..... ΩV (Resistance and Voltage measurement) Range ..... 30 mΩ, 10 V Sampling rage ..... SLOW Zero adjustment..... Enabled

Preparations

1 Connect the power cord.
See "2.2 Connecting the Power Cord" (⇒ p.16).

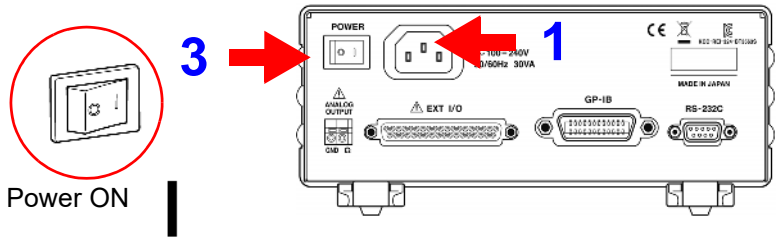

2 Connect the test leads.
See "2.3 Connecting the Optional Test Leads" (⇒ p.17).

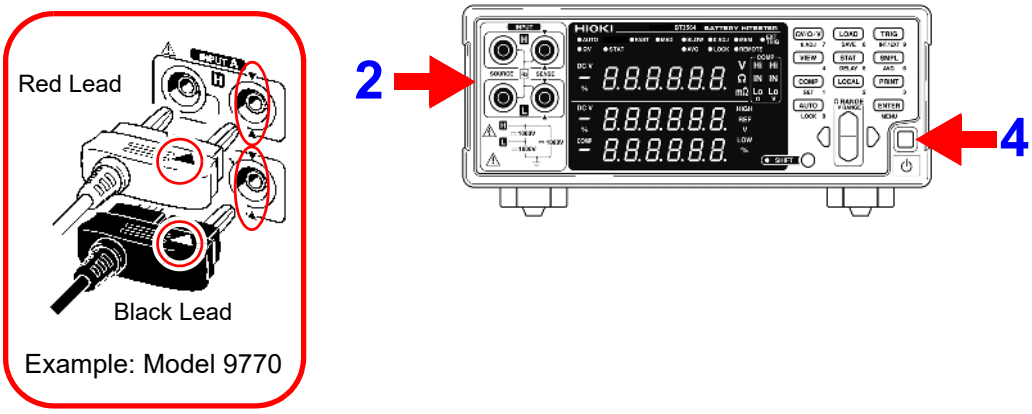

3 Turn the main power switch on.
See "2.4 Turning the Power On and Off" (⇒ p.18).
See "2.5 Selecting the Line Frequency" (⇒ p.20).

4 Cancel the standby state.
See "Cancelling the Standby State" (⇒ p.19).

Instrument Settings

5 Confirm the SHIFT lamp is not lit.
If this is lit, press the **SHIFT** key to turn it off.

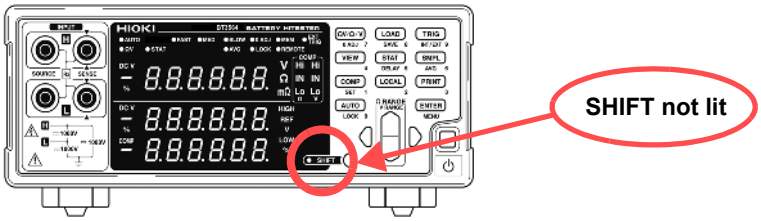

6 ΩV/Ω/V Select the measurement mode.
(for this example, resistance and voltage measurement is selected.)
See "3.3 Selecting Measurement Mode" (⇒ p.26).

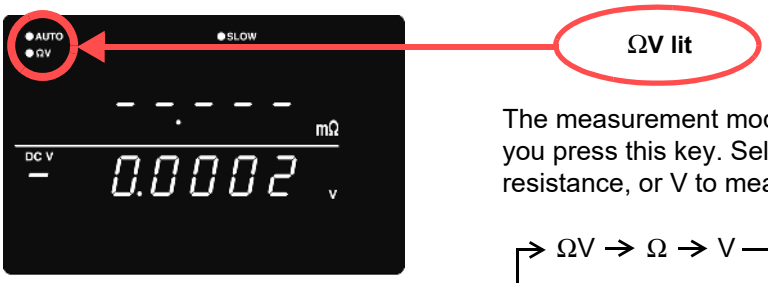

The measurement mode changes each time you press this key. Select Ω to measure only resistance, or V to measure only voltage.

→ ΩV → Ω → V

7 Set the measurement range. (for this example, 30 mΩ range is selected.)
See "3.4 Setting Measurement Range" (⇒ p.27).

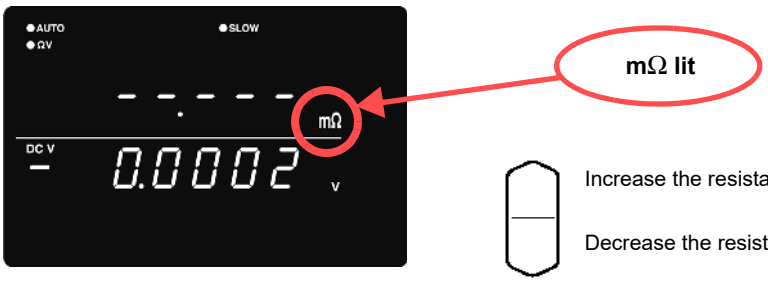

Increase the resistance measurement range.

Decrease the resistance measurement range.

8 SHIFT (SHIFT Lamp lit)

Set the voltage measurement range. (for this example, the 10 V setting has been selected.)
See "Voltage measurement range" (⇒ p.28)

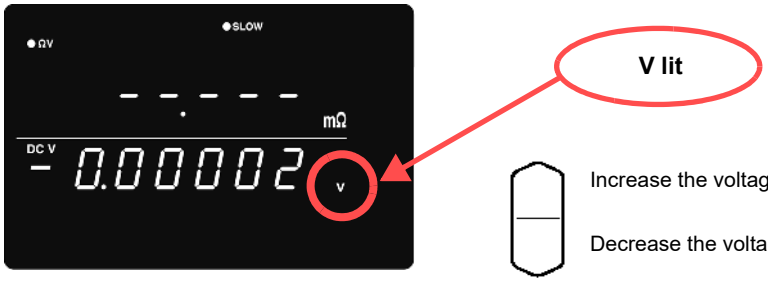

Increase the voltage measurement range.

Decrease the voltage measurement range.

9 SMPL Set the sampling rate. (for this example, SLOW is selected.)
See "3.5 Setting Sampling Rate" (⇒ p.30).

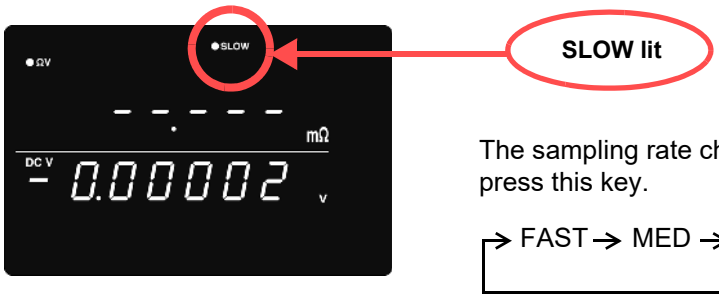

The sampling rate changes each time you press this key.

→ FAST → MED → SLOW

Zero-Adjustment

10 Short-circuit the test leads together.
Proper Zero-Adjustment is not possible with incorrect wiring.

See "3.6 Zero-Adjust Function" (⇒ p.30).

Example: Model 9770 Pin Type Lead

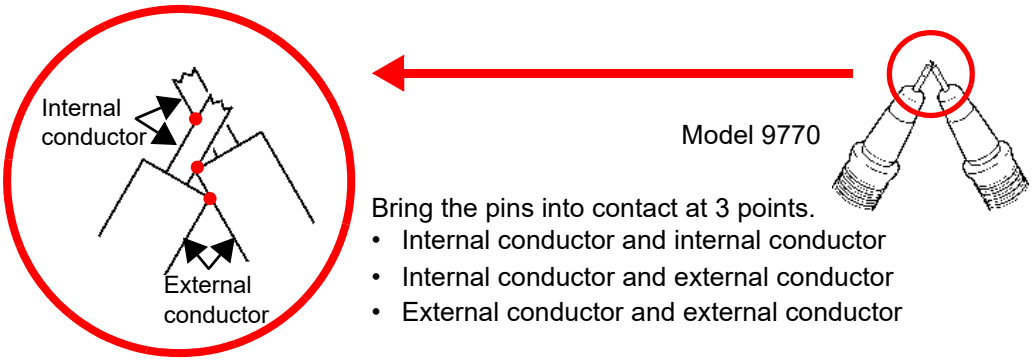

Bring the pins into contact at 3 points.
- Internal conductor and internal conductor
- Internal conductor and external conductor
- External conductor and external conductor

11 SHIFT (The SHIFT indicator lights up.)
↓
ΩV/Ω/V
0 ADJ

Execute Zero-Adjust.
After zero-adjustment, the display returns to the measurement mode.

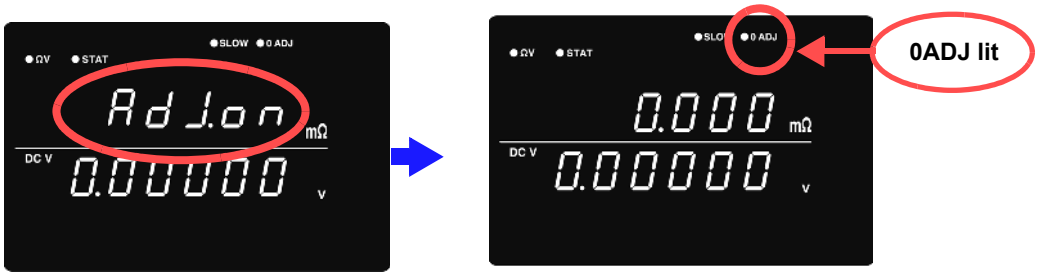

"**Err.02**" appears if Zero-Adjustment fails. Verify that the test lead tips are properly shorted, and try zero-adjustment again.

Measurement

12 Connect the test leads to a battery.

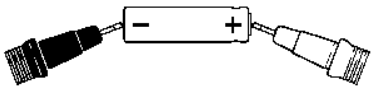

NOTE

Open-terminal voltages for the instrument are as follows:
3 mΩ and 30 mΩ ranges: 25 V peak
300 mΩ range: 7 V peak
3 Ω to 3000 Ω: 4 V peak
These voltages derive from the load associated with charging the 1.2 uF capacitor inside the instrument.

- The open-terminal voltage for the 3 mΩ, 30 mΩ, and 300 mΩ ranges peaks at 4 V approximately 500 ms after the terminal is placed in the open state.
- When building a measurement line using scanners, use a relay with a dielectric strength that is greater than or equal to the open-terminal voltage for the range being used.

13 Read the measured resistance and voltage.

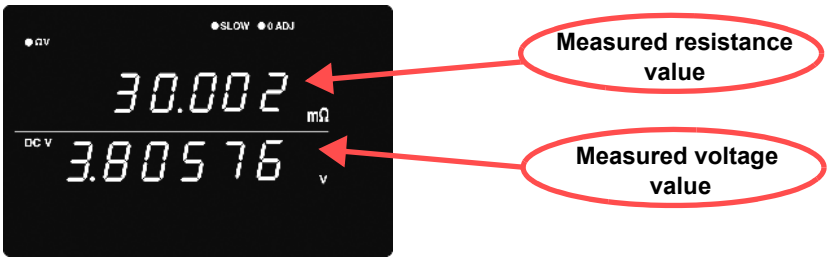

See "3.7 Displaying Measurement Results" (⇒ p.35).
See "10.3 Error Indication" (⇒ p.175).

NOTE

Please refer to "Measured value is unstable." of "Before returning for repair." (⇒ p.173) as a measurement and attention.

3.3 Selecting Measurement Mode

Select the measurement mode from ΩV (both resistance and voltage measurement), Ω (resistance measurement only), or V (voltage measurement only).

1

Confirm the SHIFT lamp is not lit.
If this is lit, press the **SHIFT** key to turn it off.

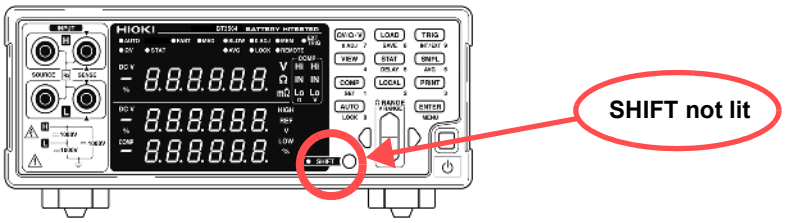

2 ΩV/Ω/V

Switches the displayed measurement mode.
Each key-press switches the measurement mode.

ΩV mode
(Resistance and Voltage measurement) measurement)

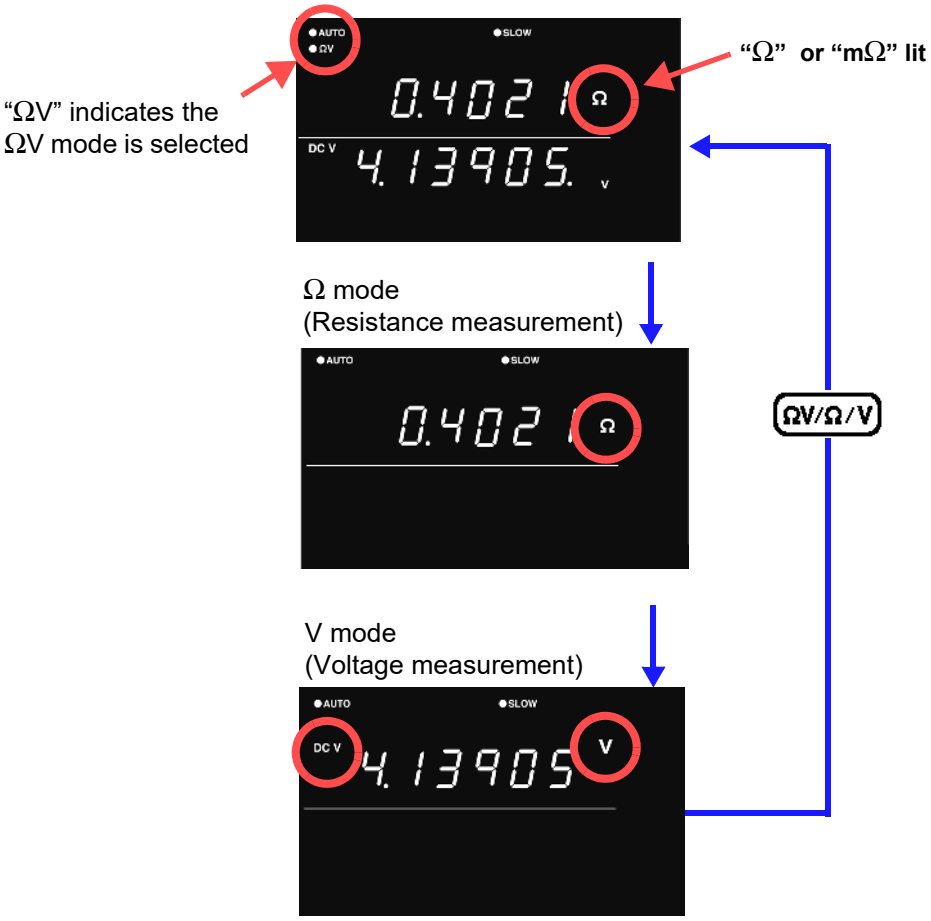

NOTE

The fastest measurements are provided by selecting the Ω or V mode when measuring resistance or voltage, respectively.
See "Sampling time" (⇒ p.166).

3.4 Setting Measurement Range

This section describes how to set the measurement range for resistance or voltage measurement. For resistance measurement, you can select from seven ranges from 3 mΩ to 3000 Ω. For voltage measurement, you can select from three ranges from 10 V to 1000 V. There is also an auto-range function, which determines the optimal range automatically.

Resistance measurement range

1

Select the resistance measurement range.
The position of the decimal point and unit of measurement on the display will be switched according to the selected range.

When the 3 Ω range is selected

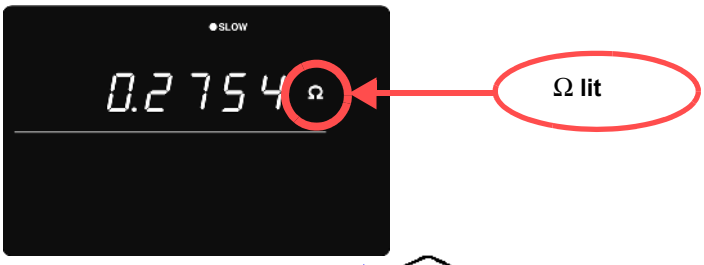

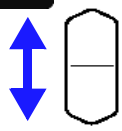

Increase the resistance measurement range.

Decrease the resistance measurement range.

When the 300 mΩ range is selected

NOTE Pressing the up or down keys while in auto-range mode will cancel auto-ranging, leaving the current measurement range as the manually set range.

Voltage measurement range

1 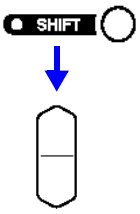

(The SHIFT indicator lights up.)
Select the voltage measurement range.

When the 1000 V range is selected

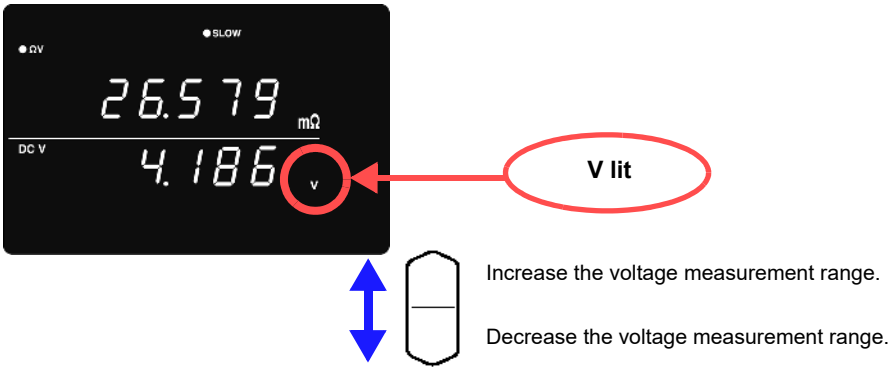

When the 100 V range is selected

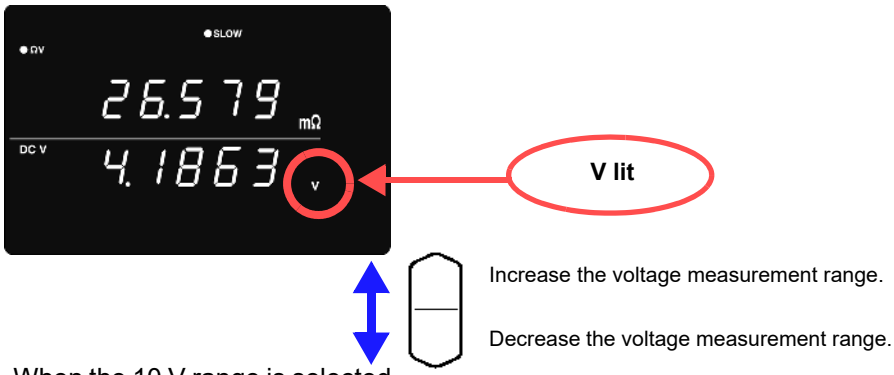

When the 10 V range is selected

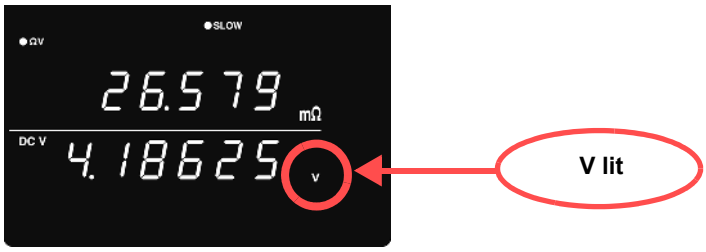

Auto-Ranging

AUTO

When manual range selection is enabled, pressing this enables auto-ranging. The most suitable measurement range is then selected automatically.

NOTE

The auto-range setting (on/off) for the ΩV function applies to both resistance and voltage measurement.

Switching from auto-ranging back to manual range selection

Press the **AUTO** key again. The range can now be changed manually.

NOTE

- Depending on the state of the test object, auto-ranging may be unstable. In this case, select the range manually, or increase the Delay time.
- Auto-ranging is not available when Comparator or Memory functions are enabled (ON).
- Refer to "Chapter 9 Specifications" (⇒ p.165) for details about accuracy.

Range	Displayed Values	Resistance Measurement Mode	
		Measured Current	Open-circuit Voltage
3 mΩ	-0.1000 to 3.1000 mΩ	100 mA	25 V peak
30 mΩ	-1.000 to 31.000 mΩ	100 mA	25 V peak
300 mΩ	-10.00 to 310.00 mΩ	10 mA	7 V peak
3 Ω	-0.1000 to 3.1000 Ω	1 mA	4 V peak
30 Ω	-1.000 to 31.000 Ω	100 µA	4 V peak
300 Ω	-10.00 to 310.00 Ω	10 µA	4 V peak
3000 Ω	-100.0 to 3100.0 kΩ	10 µA	4 V peak
10 V	-9.99999 to 9.99999 V	--	--
100 V	-99.9999 to 99.9999 V	--	--
1000 V	-999.999 to 999.999 V	--	--
	-1100.00 to -1000.00 V	--	--
	1000.00 to 1100.00 V	--	--

3.5 Setting Sampling Rate

The sampling rate can be selected from FAST, MEDIUM, or SLOW. Slower sampling rates generally provide greater measurement precision.

SMPL Selects the sampling rate

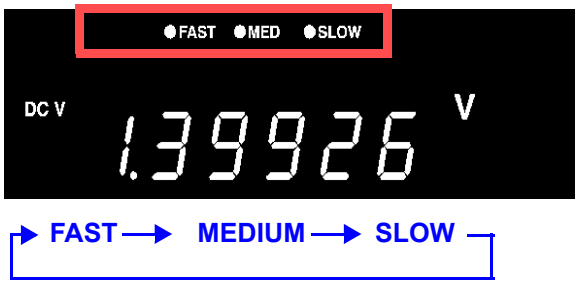

FAST → MEDIUM → SLOW

NOTE

- When SLOW sampling rate is selected, self-calibration is executed during each measurement. At other sampling rates, self-calibration is executed manually or automatically every 30 minutes.
  See "4.9 Self-Calibration" (⇒ p.69).
- Refer to the specifications for details of sampling time.
  See "Sampling time" (⇒ p.166).

3.6 Zero-Adjust Function

Execute zero adjustment before measuring to nullify any residual offset voltage from the instrument or measurement environment. Measurement accuracy specifications are applicable after zero adjustment. Zero adjustment can also be executed by the 0ADJ terminal of the EXT I/O connector.
See "5.2 Signal Descriptions" (⇒ p.76).

Wiring Method for Zero-Adjustment

Before executing zero adjustment, connect the test leads (probes) as follows:
1. Connect SENSE-H to SENSE-L.
2. Connect SOURCE-H to SOURCE-L.
3. Connect the joined SENSE and SOURCE leads together as shown below.

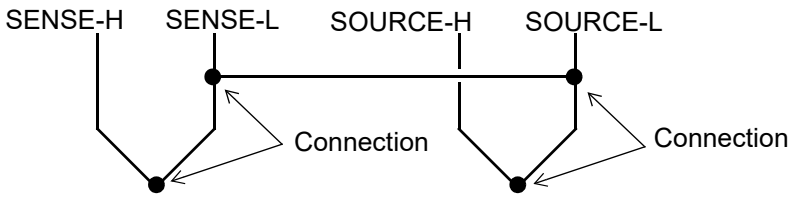

Executing Zero-Adjustment

1 Position the measurement leads in the actual measurement state.
Since the amount of zero adjustment varies with the position and state of the measurement leads (probes) (i.e., their length, shape, position, etc.), the measurement leads must be positioned in the actual measurement state before performing zero adjustment.

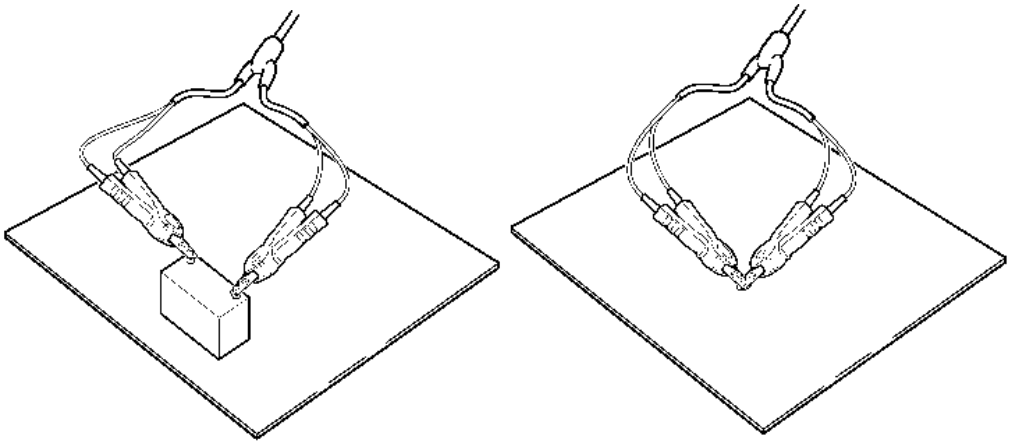

These variations are particularly pronounced in the 3 mΩ and 30 mΩ ranges, so be sure to position the leads in same state as will be used to perform actual measurement when using those configurations.

2 Short-circuit the test leads together.
Proper zero adjustment is not possible with incorrect wiring.

Example: Model L2107 Clip Type Leads

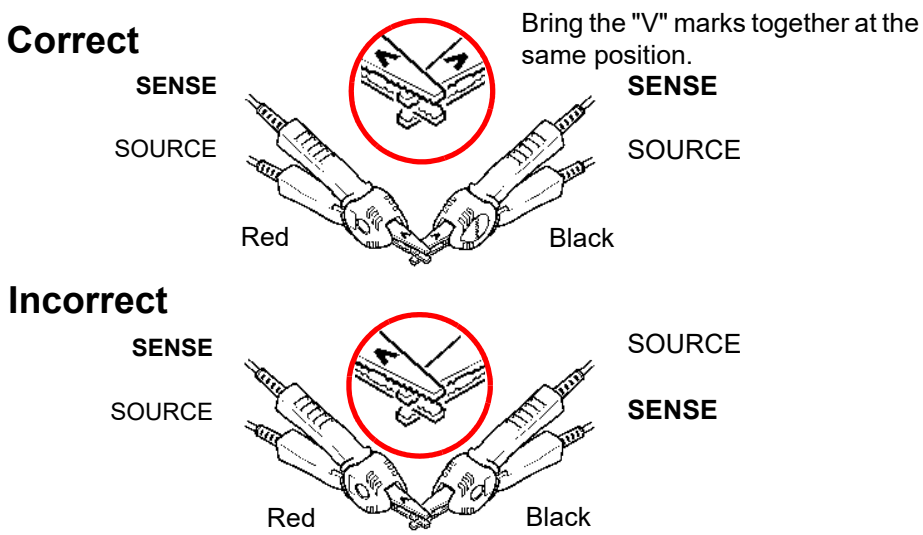

Model 9453 (Option)

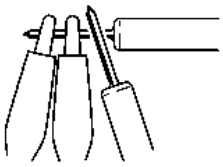

Perform zero adjustment with the alligator clips and lead rods placed as above.

Model 9771 (Option)

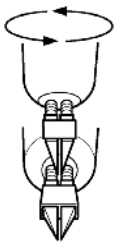

When the measured resistance value is displayed as "-----", change the facing direction.
Let the two points of the pin tip touch the spring part perpendicularly (be careful not to short-circuit the springs).

Model 9770 (Option)

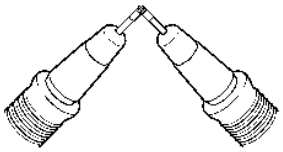

Bring the pins into contact at 3 points to perform zero adjustment.

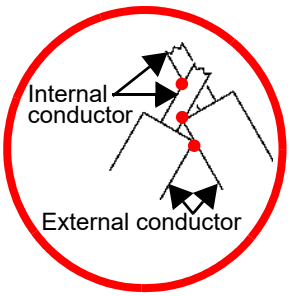

Model L2100 (Option)

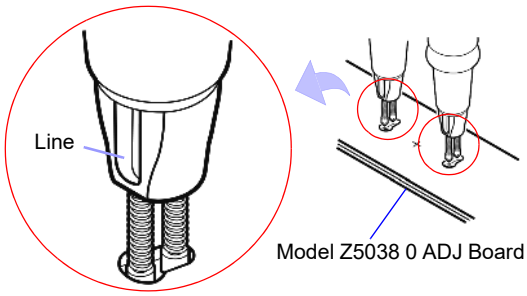

Each sense pin has a line affixed to its base. When using the zero-adjust feature, orient the test lead so that the surface the same direction.
Choose a hole suited to the distance between the terminals on the battery subject to measurement and hold the test lead against the zero-adjust board so that it remains symmetrical to the central plus sign (+) on the board. While inserting each SENSE (the side with a line) pin into the larger side of each elongate hole.

Model L2110 (Option)

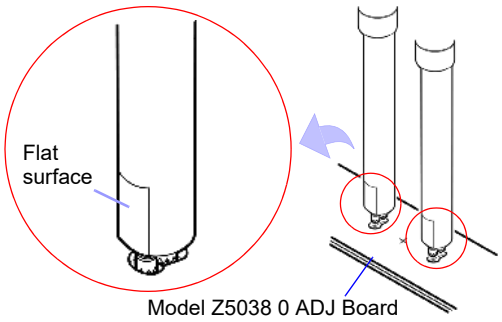

The sense side of the tip of the test lead has a flat surface. When using the zero-adjust feature, orient the test lead so that the surface the same direction.
Choose a hole suited to the distance between the terminals on the battery subject to measurement and hold the test lead against the zero-adjust board so that it remains symmetrical to the central plus sign (+) on the board. While inserting each SENSE (the side with the surface) pin into the larger side of each elongate hole.

3 SHIFT (The SHIFT indicator lights up.)

ΩV/Ω/V
0 ADJ

Zero-adjust display appears.

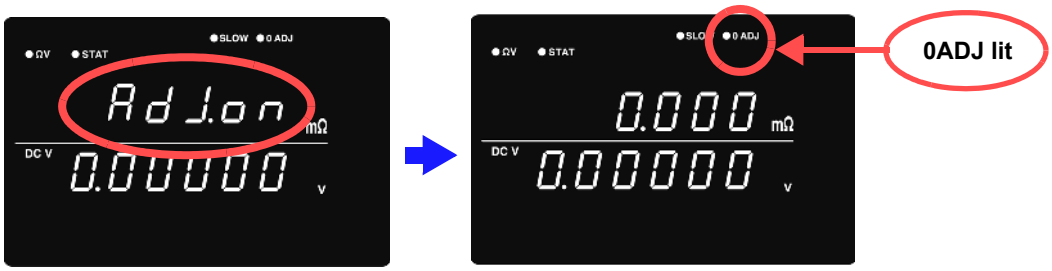

After measurement, the measured value of the compensation applied by the zero-adjust function is displayed.
The range of zero adjustment is up to ±1000 dgt.

Clearing Zero-Adjustment

1 SHIFT → ENTER (MENU)

(The SHIFT indicator lights up.)

The Menu display appears.

(Main display)

(Sub display) flashing

2 ENTER

The zero-adjust value function is canceled. (**0ADJ** not lit)

(Main display)

If Err02 is displayed

Indicates that zero adjustment could not be executed, either because the range to be adjusted exceeds ± 1000 dgt, or a measurement fault condition exists. The zero adjust function is canceled, so repeat the operation after correcting the cause of the error.

NOTE

- Zero adjustment is limited to ± 1000 dgt. (all ranges)
- Perform zero adjustment for each range that is used in measurement.
- When using the auto-range function, perform zero adjustment for all ranges.
- When using the ΩV function, the 0ADJ indicator lights up or turns off according to the resistance measurement range zero-adjust state.
- Zero-adjustment values are retained even when power is turned off.
- The 0ADJ terminal of the EXT I/O connector also executes zero adjustment. **See** "5.2 Signal Descriptions" (⇒ p.76).

3.7 Displaying Measurement Results

In the ΩV mode, the resistance measured value appears on the upper display, and the measured voltage value appears on the lower display.

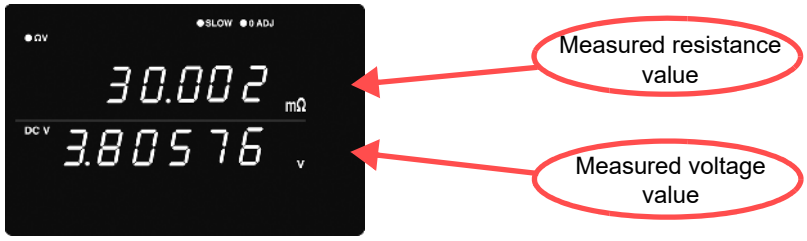

In the Ω mode, the measured resistance value appears on the upper display.

In the V mode, the measured voltage value appears on the upper display.

NOTE Please refer to "Measured value is unstable." of "Before returning for repair." (⇒ p.173).

Measurement Fault Detection

If a measurement does not execute properly, a measurement fault "- - - - -" is indicated on the display.
In addition, a measurement fault signal (ERR) is output at the EXT I/O connector.
See " ERR Output" (⇒ p.79).

A measurement fault is displayed in the following cases.
- When a test lead is not connected to the test object
- When the resistance of the measured object is over-range
  Example: Attempting to measure 30 W with the 300 mW range selected.
- When there is a break in a probe wire
- When the contact resistance is high due to probe wear, dirt, or other factors, or when the wiring resistance is high (see chart below)
- If the circuit protection fuse is blown
  See "10.1 Troubleshooting" (⇒ p.173).

Levels at which a measurement fault is detected
A measurement result is detected as a fault when the resistance values (contact resistance + wiring resistance + test object resistance) between the source H and L or the sense H and L leads is greater than or equal to the values in the following table:

Range	SOURCE H-L	SENSE H-L
3 mΩ	3 Ω	3 Ω
30 mΩ	3 Ω	3 Ω
300 mΩ	20 Ω	20 Ω
3 Ω	200 Ω	20 Ω
30 Ω	2 kΩ	200 Ω
300 Ω	6 kΩ	2 kΩ
3000 Ω	6 kΩ	20 kΩ

*Large contact resistance and/or wiring resistance values may increase the error component in measured values. (Accuracy is not guaranteed when the sum of contact resistance and wiring resistance is greater than or equal to 20 Ω [for the 3 mΩ and 30 mΩ ranges, 2 Ω].)
*The instrument may be unable to detect measurement faults when the measurement lead capacitance is greater than or equal to 1 nF.

Overflow Display

Overflow is indicated by "**OF**" or "**-OF**" on the display, caused by one of the following:

Display	Condition
OF	• The measured value exceeds the limit of the current measurement range • The test object impedance exceeds the input level. • When the result of relative value calculation is larger than +99.999%.
-OF	• The measured value is below the limit of the current measurement range • The test object impedance exceeds the input level (in the negative direction). • When the result of relative value calculation is smaller than -99.999%.

Applied Measurement

Chapter 4

This chapter describes advanced operations employing the Comparator, Statistical Calculation and Memory functions.

Judge measurement values against specified thresholds	Comparator Function	(⇒ p.40)
Measure when trigger events occur	Trigger Function	(⇒ p.57)
Output averaged measurement values	Averaging Function	(⇒ p.59)
Display the results of calculation expressions applied to measurement values	Statistical Calculation Functions	(⇒ p.60)
Store measurement values	Memory Function	(⇒ p.64)
Lock the keys	Key-Lock Function	(⇒ p.66)
Save measurement configurations	Panel Save Function	(⇒ p.67)
Load saved measurement configurations	Panel Load Function	(⇒ p.68)
Increase measurement precision	Self-Calibration	(⇒ p.69)
Output measurement values via the RS-232C interface according to trigger input timing	Measurement Value Output Function	(⇒ p.70)
Enable/disable key-press beeps	Key Beeper Setting	(⇒ p.71)
Re-initialize the instrument	Reset Function	(⇒ p.72)

4.1 Comparator Function

The comparator function compares measured values to preset upper and lower thresholds, judges the measurements according to their relative levels within the preset range, and indicates the results of the comparisons.
Comparator thresholds can be set either by specifying upper and lower thresholds, or by specifying a reference value and tolerance.
Comparator results can be indicated by the Hi, IN and Lo LEDs, beeper sound and signal output at the EXT I/O connector.
See "Chapter 5 External Control (EXT I/O)" (⇒ p.75).

The comparator setting process flow is as follows:

1. **Displaying the comparator settings**
2. **Setting the comparator judgment beeper**
3. **Selecting the comparator mode**
4. **Selecting the resistance (If you do not need to configure resistance settings, proceed to step 7.)**
5. **Selecting the resistance comparison method**
6. **Specifying the resistance upper and lower thresholds (or reference value and tolerance)**
7. **Selecting the voltage**
8. **Selecting the voltage comparison method (absolute or relative value) for the comparator**
9. **Specifying the voltage upper and lower thresholds (or reference value and tolerance)**
10. **Applying your comparator settings**
11. **Enabling the comparator function**

Comparator Setting Example 1 (Upper and Lower Threshold Judgment)

This example describes the comparator setting method.

Example:
Set the upper and lower thresholds for resistance and voltage in the ΩV mode (300 mΩ range), and indicate whether the measurement value exceeds the upper or lower thresholds by sounding the beeper.

Resistance : Upper threshold value 150.00 mΩ, Lower threshold value 100.00 mΩ
Voltage : Upper threshold value 15.2000 V, Lower threshold value 15.0000 V

1 Confirm that the comparator function is off.
(Settings cannot be changed while the Comparator function is enabled. Press the **COMP** key to disable the comparator function.)

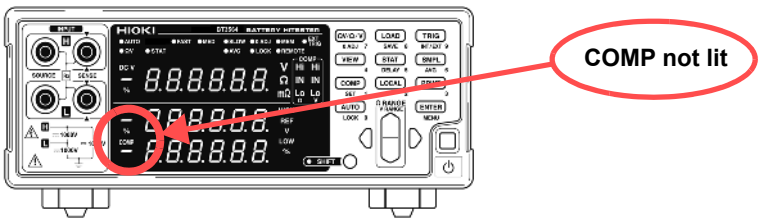

2 ΩV/Ω/V Select the ΩV measurement mode.

3 Select the resistance measurement range (for this example, the 300 mΩ range).

4 SHIFT Select the voltage measurement range (for this example, the 100 V range).

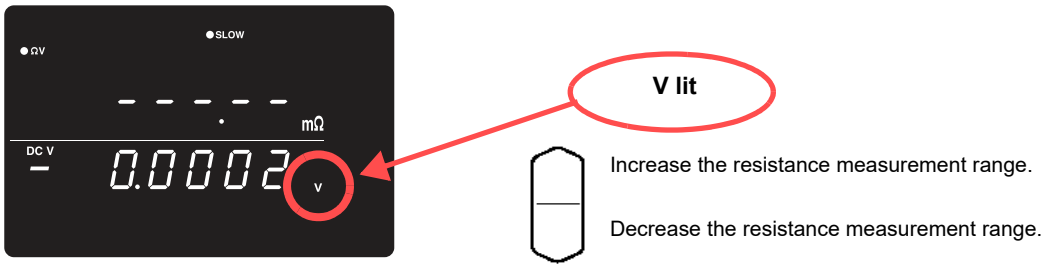

5 SHIFT → COMP SET

The Comparator setting display appears.

6

Select the comparator judgment beeper (for this example, HL).

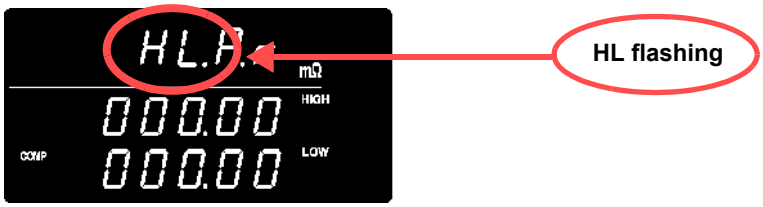

oFF .....no beeps sound
HL.....beeps repeatedly (when measurements are Hi or Lo)
in .....beeps continuously (when measurements are IN)
btH1.....beeps continuously while measurements are within the thresholds (IN), and beeps repeatedly when measurements are Hi or Lo.
btH2.....beeps once when measurements move into the threshold range (IN), and beeps repeatedly when measurements go Hi or Lo.

7

Press so that the indicated position blinks, and select the comparator mode (for this example, Auto).

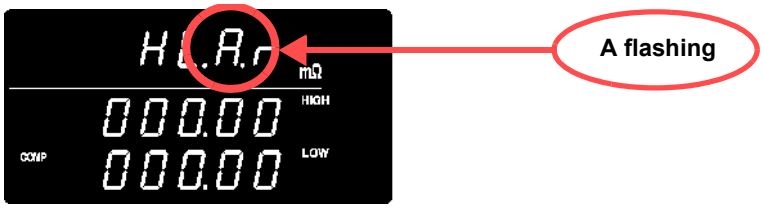

A ..... Auto comparator (default setting)
E ..... Manual comparator

8

Press so that the indicated position blinks, and select resistance.

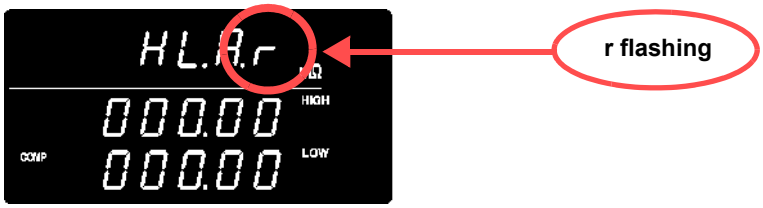

r .....Resistance
u .....Voltage

9 Press so that the indicated position blinks, and select the comparison method for the comparator (for this example, HIGH/LOW).

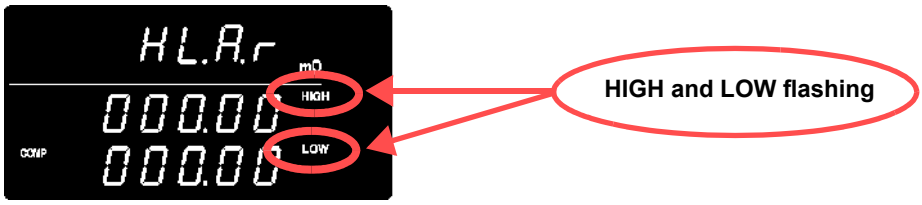

HIGH, LOW ..... Compare by upper and lower thresholds (default setting)

REF, % ..... Compare by reference value and tolerance

10 Switch to the upper/lower threshold setting display, and specify the thresholds.

Or numeric key-pads

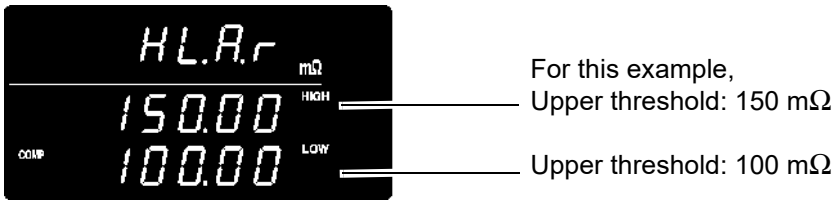

When using the **RANGE** keys:

Select a digit to change by moving the blinking location, then select the new numerical value.

Select a digit

Select numerical value

when using the numeric keypads:

Press the numeric keys corresponding to the digits to be entered.

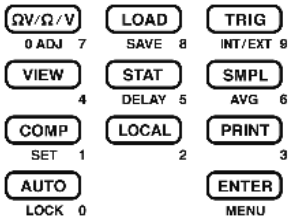

To enter the current measured value: **AUTO** key
(Press on a screen other than the upper/lower threshold setting display.)
To enter the result of statistical calculation value: **STAT** key
(Press on a screen other than the upper/lower threshold setting display.)
See " Upper and Lower Thresholds Setting (by Reference Value and Tolerance)" (⇒ p.52).

11 Press so that the indicated position blinks, and select voltage.

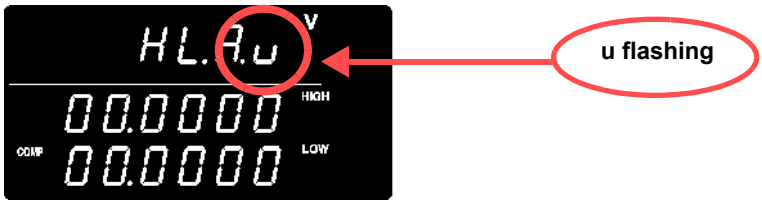

r ..... Resistance (default setting)
u ..... Voltage

12

Press so that the indicated position blinks, and select the comparison method for the comparator (for this example, HIGH/LOW).

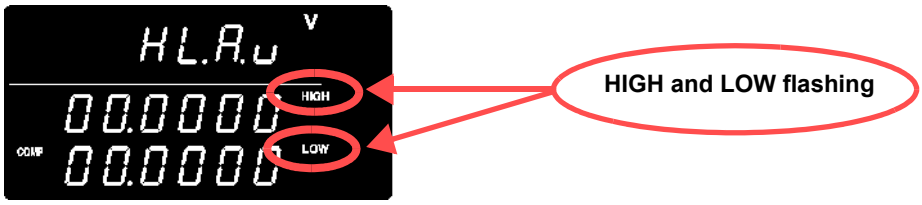

HIGH, LOW ..... Compare by upper and lower thresholds (default setting)
REF, %..... Compare by reference value and tolerance

13

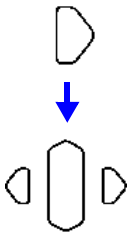

Or numeric key-pads

Switch to the upper/lower threshold setting display, and specify the thresholds.

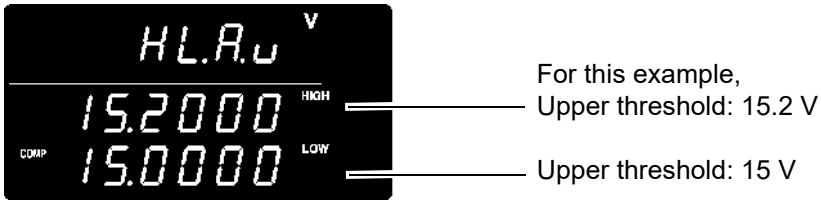

14 ENTER

Applies the settings and returns to the measurement display.
The comparator function is enabled.

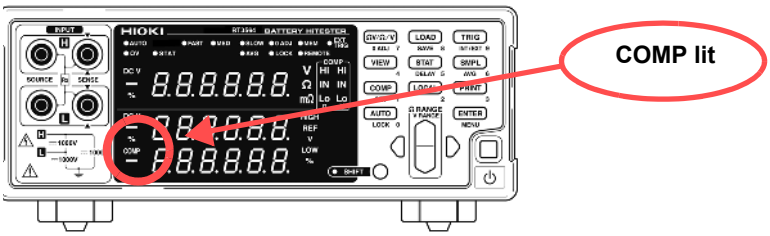

To cancel the settings: **SHIFT** key

15

Connect a test object and judge the measured value.

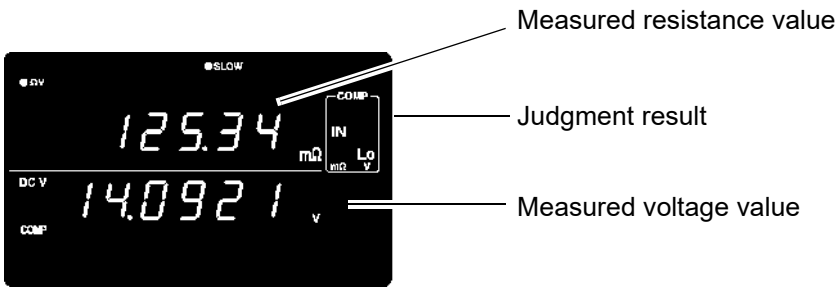

In the ΩV mode, you can verify comparator settings by pressing the **VIEW** key.
See " Switching Between Measurement Value and Comparator Setting Displays" (⇒ p.56).

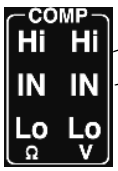

Upper threshold value < Measured value
Lower threshold value ≤ Measured value ≤ Upper threshold value
Measured value < Lower threshold value

NOTE

- The upper and lower thresholds are saved as the displayed counts (independent of measurement mode and range). Therefore, changing the measurement mode or range results in the same display counts representing different absolute values.
  Example:
  To specify the lower threshold as 150 mΩ in the 300 mΩ range, enter “15000”. Switching to the 3 Ω range after making this setting changes the lower threshold to 1.5 Ω.
- The instrument can also base judgments on the absolute value of measured voltage values (to prevent Lo judgments when the positive and negative terminals are connected backwards).

See "Configuring the Absolute Value Judgment Function (Voltage)" (⇒ p.53)

Comparator Setting Example 2 (Reference Value and Tolerance Judgment)

This example describes the comparator setting method.

Example:
Set a reference value and tolerance in the ΩV mode (3 Ω range), and set the beeper to sound while measured values are within tolerance.

Resistance : Reference value 1.5 Ω, Tolerance 5%
Voltage : Reference value 4.2 V, Tolerance 0.5%

1 Confirm that the Comparator function is off.
(The settings cannot be changed while the Comparator function is enabled. Press the **COMP** key to disable the Comparator function.)

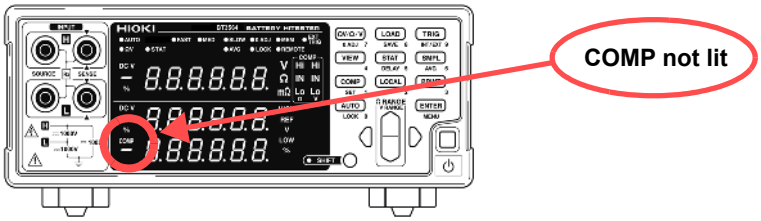

2 ΩV/Ω/V Select the ΩV measurement mode.

3 Select the measurement range (for this example, the 3 Ω range).

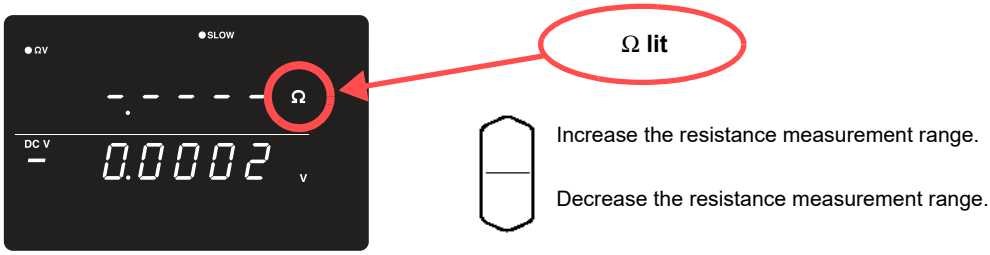

4 Select the voltage measurement range (for this example, the 10 V range).

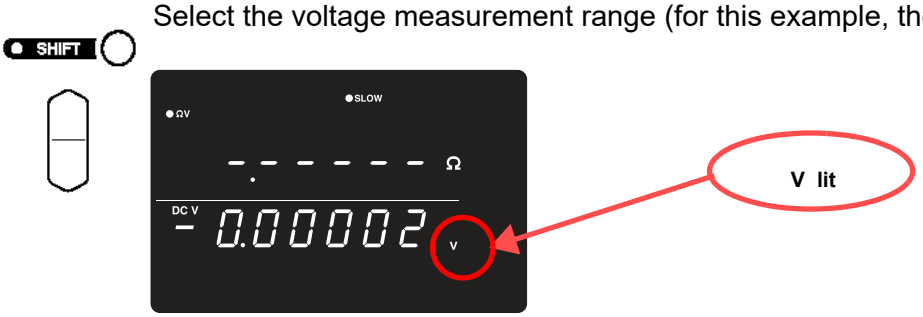

5 The Comparator setting display appears.

6 Select the comparator judgment beeper (for this example, select In).

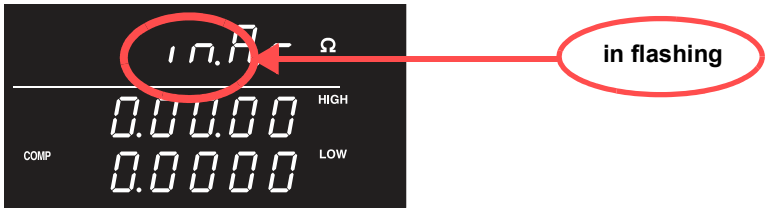

oFF .....no beeps sound
HL.....beeps repeatedly (when measurements are Hi or Lo)
in .....beeps continuously (when measurements are IN)
btH1.....beeps continuously while measurements are within the thresholds (IN), and beeps repeatedly when measurements are Hi or Lo.
btH2.....beeps once when measurements move into the threshold range (IN), and beeps repeatedly when measurements go Hi or Lo.

7 Press so that the indicated position blinks, and select the comparator mode (for this example, Auto).

A..... Auto comparator (default setting)
E..... Manual comparator

8 Press so that the indicated position blinks, and select resistance.

r..... Resistance (default setting)
u ..... Voltage

9 Press so that the indicated position blinks, and select the comparison method for the comparator (for this example, REF/%).

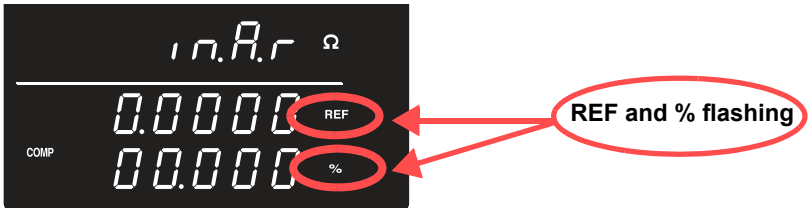

HIGH, LOW..... Compare by upper and lower thresholds (default setting)
REF, % ..... Compare by reference value and tolerance

10 Switch to the Ref/% threshold setting display, and specify the thresholds.

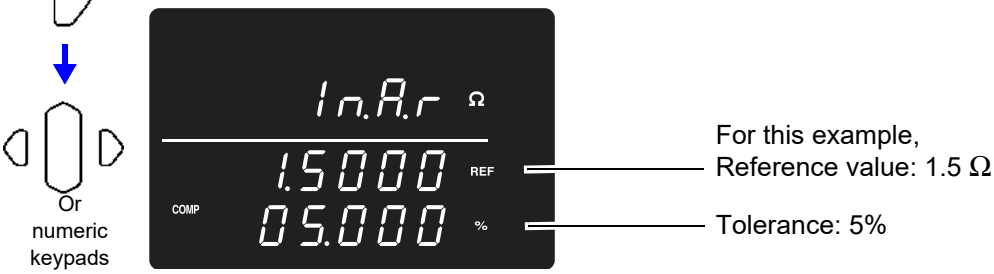

When using the **RANGE** keys:	When using the numeric keypads:
Select a digit to change by moving the blinking location, then select the new numerical value.	Press the numeric keys corresponding to the digits to be entered.
Select a digit	
Select numerical value	

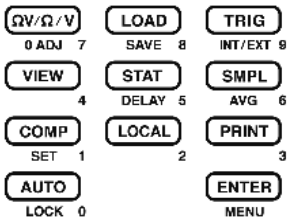

To enter the current measured value: **AUTO** key
(Press on a screen other than the upper/lower threshold setting display.)
To enter the result of statistical calculation value: **STAT** key
(Press on a screen other than the upper/lower threshold setting display.)
See " Upper and Lower Thresholds Setting (by Reference Value and Tolerance)" (⇒ p.52).

11

Press so that the indicated position blinks, and select voltage.

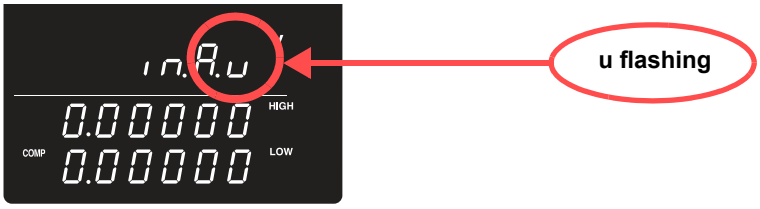

r .....Resistance
u .....Voltage

12

Press so that the indicated position blinks, and select the comparison method for the comparator (for this example, REF/%).

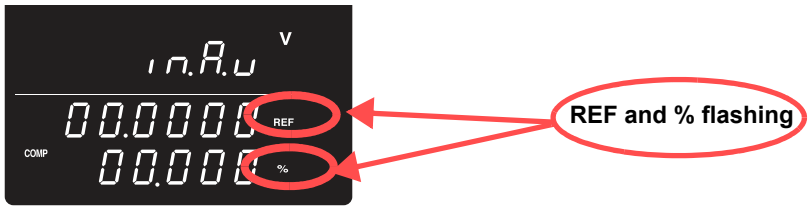

HIGH, LOW .....Compare by upper and lower thresholds (default setting)
REF, %.....Compare by reference value and tolerance

13

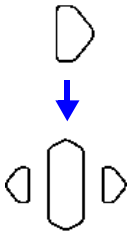

Switch to the Ref/% threshold setting display, and specify the thresholds.

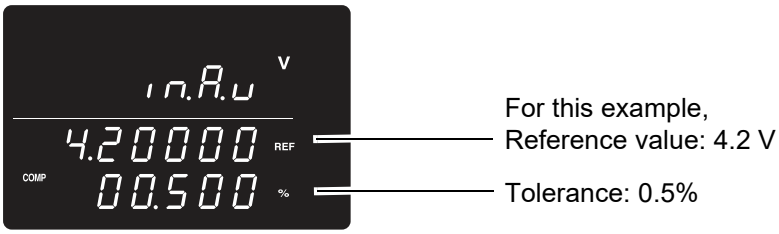

14 ENTER

Applies the settings and returns to the measurement display.
The comparator function is enabled.

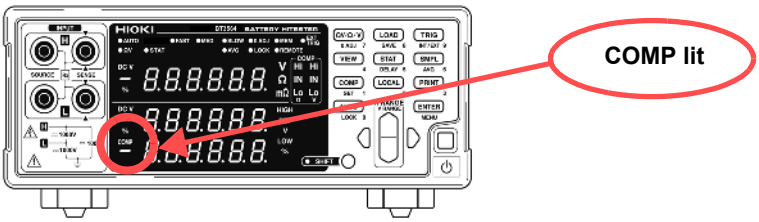

To cancel the settings: **SHIFT** key

15 Connect a test object and judge the measured value.

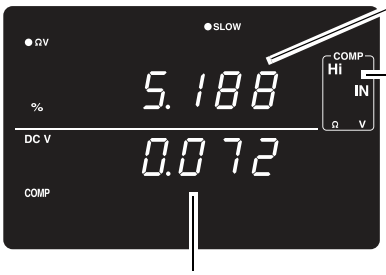

The measured resistance value is displayed as its relative percentage offset from the reference value (%)

Judgment result

$$\text{Relative percentage} = \frac{\text{Measured resistance value - Reference value}}{\text{Reference value}} \times 100$$

The measured voltage value is displayed as its relative percentage offset from the reference value (%)

In the ΩV mode, you can verify comparator settings by pressing the **VIEW** key.
See " Switching Between Measurement Value and Comparator Setting Displays" (⇒ p.56).

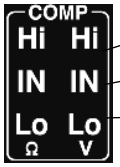

Upper threshold value of setting range < Measured value

Lower threshold value of setting range ≤ Measured value ≤ Upper threshold value of setting range

Measured value < Lower threshold value of setting range

NOTE The instrument can also base judgments on the absolute value of measured voltage value (to prevent Lo judgments when the positive and negative terminals are connected backwards).
See "Configuring the Absolute Value Judgment Function (Voltage)" (⇒ p.53)

Comparator Judgment Beeper Setting

Four beeper settings are available to audibly indicate comparator judgment results.

1 SHIFT (The SHIFT indicator lights up.)

COMP SET

The Comparator setting display appears.

2

Set the comparator judgment beeper.

(Main display)

oFF .....no beeps sound
HL.....beeps repeatedly (when measurements are Hi or Lo)
in .....beeps continuously (when measurements are IN)
btH1.....beeps continuously while measurements are within the thresholds (IN), and beeps repeatedly when measurements are Hi or Lo.
btH2.....beeps once when measurements move into the threshold range (IN), and beeps repeatedly when measurements go Hi or Lo.

NOTE

- The beeper does not sound when the comparator judgment beeper setting is disabled (oFF).
- The beeper does not sound when there is no judgment result.

See " Comparator Judgment Results" (⇒ p.55).

Comparator Mode Setting

Comparator judgment execution is selected by setting the auto or manual comparator mode. Comparator judgment can be enabled and disabled by EXT I/O signals. Refer to "Input Signals" (⇒ p.77).

1 SHIFT (The SHIFT indicator lights up.)

COMP SET

The Comparator setting display appears.

2

Press so that the indicated position blinks, and set the comparator mode.

(Main display)

A .....Auto comparator (comparator results are always output [default setting])
E .....Manual comparator (comparator results are output only when the MANU EXT I/O input is enabled [ON])

NOTE

The auto setting is appropriate for normal use. Use the manual/external setting when you need to control comparator judgment timing.

Comparator Threshold Method Selection

Two methods are available for setting comparator thresholds.

1 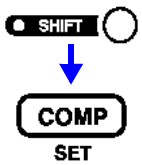

(The SHIFT indicator lights up.)

The Comparator setting display appears.

2

Press so that the indicated position blinks, and set the comparator threshold method.

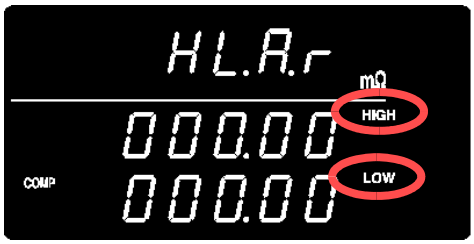

HIGH, LOW ..... Compare against specified upper and lower thresholds (default setting method)

REF, % ..... Compare against upper and lower thresholds internally calculated from a specified reference value and tolerance

About comparisons based on a reference value and tolerance

When the reference value and tolerance method is selected, thresholds are calculated as follows:

Upper threshold = reference value × (100 + tolerance [%]) / 100

Lower threshold = reference value × (100 - tolerance [%]) / 100

Measured values are displayed as a percentage relative to the reference value, calculated as follows:

Relative value = (measured value - reference value) / reference value × 100 [%]

Upper and Lower Thresholds Setting (by Reference Value and Tolerance)

1 SHIFT (The SHIFT indicator lights up.)

COMP SET

The Comparator setting display appears.

2 Press so that the indicated position blinks, and select resistance or voltage.

r .....Resistance
u .....Voltage

3 Select the threshold setting display, and enter upper and lower threshold values.

Or numeric keypads

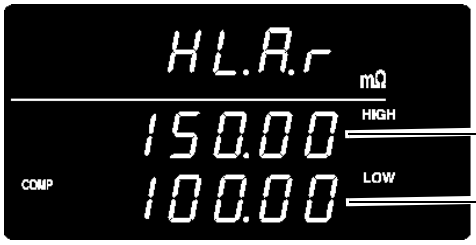

For example,
Upper threshold: 150 mΩ

Lower threshold: 100 mΩ

When using the **RANGE** keys:

Select a digit to change by moving the blinking location, then select the new numerical value.

Select a digit

Select numerical value

When using the numeric keypads

Press the numeric keys corresponding to the digits to be entered.

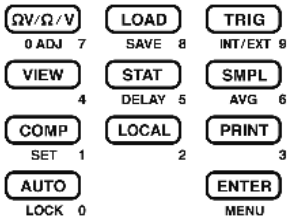

To enter the current measurement as the setting value: AUTO key

Press on a screen other than the upper/lower threshold (reference value/tolerance) setting display. This key is used as a numeric key on the upper/lower threshold (reference value/tolerance) setting display.
The current measurement value is set as the upper or lower threshold (during upper/lower threshold setting), or as the reference value (during reference value and tolerance setting). If the measured value is faulty or ± OF, it is ignored (not entered).

To enter a statistical calculation result as the setting value: STAT key

Press on a screen other than the upper/lower threshold (reference value/tolerance) setting display. This key is used as a numeric key on the upper/lower threshold (reference value/tolerance) setting display.
The result of statistical calculation is set as follows:

During upper/lower threshold setting	Upper threshold = average value + 3σ Lower threshold = average value - 3σ
During reference value and tolerance setting	Reference value = average value Tolerance = 3σ / average value ×100%

Where "σ" represents population standard deviation (σ_n).
No setting occurs if statistical calculation is disabled and no statistical calculation result exists.
See "4.4 Statistical Calculation Functions" (⇒ p.60).

Setting thresholds from the **AUTO** and **STAT** keys is possible only when the selected (blinking) character is non-numeric.

NOTE

Threshold and reference values can be set from 0 to 99999 (or 999999 for voltage), and tolerance can be set from 0.000 to 99.999%. Negative values are not settable. Entries using statistical calculation results that exceed the valid range are restricted to the range limit.

Configuring the Absolute Value Judgment Function (Voltage)

This section describes how to configure functionality for acquiring the absolute value of the measured voltage value when judging comparators, allowing a judgment to be made based on the absolute value of the voltage even if polarity is reversed when the probes are connected to the battery.

Ordinarily, connecting the probes with the polarity reversed results in a negative measured voltage value, yielding a Lo comparator judgment result. To generate an IN judgment whenever the reading falls within the specified range, even if the probes have been connected backwards (resulting in a negative voltage measured value), set the absolute value judgment function to "On."

This function is configured on the menu screen.

1 SHIFT (The SHIFT indicator lights up.)
↓
ENTER The menu screen is displayed.

2 Display the absolute value judgment function configuration screen.

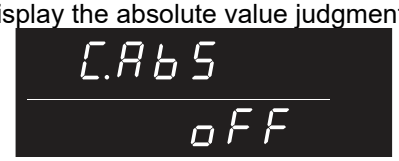

See "1.4 Menu Display Sequence (SHIFT > ENTER)" (⇒ p.13)

3 Set the absolute value judgment function to either "On" or "Off."

on ..... Absolute value judgment function on.
oFF ..... Absolute value judgment function off.

4 Accept the setting and return to the measurement screen.

For example, the following judgment results would be obtained when connecting the probes backwards to a 3.7 V battery (resulting in a displayed voltage measured value of -3.7 V) with an upper threshold of 3.9 V and a lower threshold of 3.6 V:
Absolute value judgment function off: Lo
Absolute value judgment function on: IN

Enabling and Disabling the Comparator Function

COMP Enables the comparator

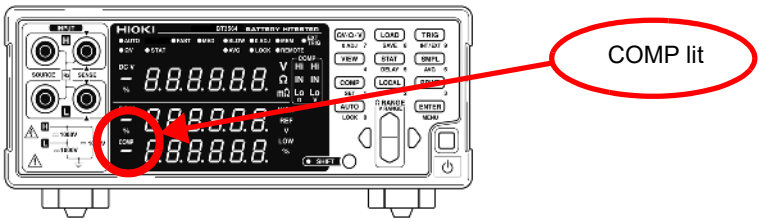

When the comparator is enabled, the following key operations are disabled to avoid inadvertent operations.

- **ΩV/Ω/V** key (Measurement mode setting)
- **SHIFT** → **ΩV/Ω/V** key (Zero-Adjustment)
- **SHIFT** → **COMP** key (Comparator setting)
- **AUTO** key (Auto-ranging setting)
- **SMPL** key (Sampling rate setting)
- **SHIFT** → **SMPL** key (Averaging setting)
- **SHIFT** → **TRIG** key (Trigger source setting)
- **SHIFT** → **ENTER** key (Menu display)
- **SHIFT** → **STAT** key (Delay setting)
- Range keys

NOTE When the comparator is enabled, auto-ranging is automatically disabled.

Comparator Judgment Results

Resistance and voltage measurements are judged independently. Both judgment results are indicated on the display.

Judgment Operation

The comparator compares measured values with the preset threshold values, and judges whether the measurement is within the thresholds. Resistance and voltage measurements are judged independently.
The absolute value of the measurement is compared to the upper and lower thresholds.
When the absolute value judgment function is on, the absolute value of the measured value is compared to the upper and lower thresholds.

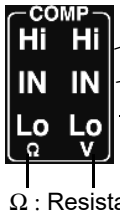

Measurement fault values are judged as follows:

Display	Judgment
- - - - -	No judgment
OF	Hi (exceeds the upper threshold)
-OF	Lo (less than the lower threshold)

PASS/FAIL Judgment Output

Judgment results (Hi, IN or Lo for both resistance and voltage) are output to EXT I/O connectors.
Additionally, the instrument can generate PASS/FAIL judgment output to facilitate easy judgments. In this configuration, it outputs a PASS judgment when the resistance and voltage are both IN and otherwise a FAIL judgment.
See " Output Signals" (⇒ p.78).

NOTE

With the relative value comparison method (thresholds defined by a reference value and tolerance), the upper and lower thresholds are calculated internally for comparison with measurements. Therefore, even if a relative display value is equal to a judgment threshold (tolerance limit), it may be judged Hi or Lo.

Switching Between Measurement Value and Comparator Setting Displays

In ΩV mode, both measured resistance value and voltage value are displayed. Although comparator setting values are not normally displayed when the comparator is enabled, they can be displayed for confirmation by the display switching function.

Example:
Resistance: Upper threshold value 150.00 mΩ, Lower threshold value 100.00 mΩ
Voltage: Upper threshold value 15.2000 V, Lower threshold value 15.0000 V

VIEW

Press this key to switch the display between measurement values and comparator setting values.

Resistance and voltage measurement display

Resistance measurement and comparator display (Shows the measured resistance value and resistance comparator setting value)

VIEW

Voltage measurement and comparator display (Shows the measured voltage value and voltage comparator setting value)

Measurement display switching is available only with the comparator enabled, and in the ΩV mode.

Use it to confirm comparator setting values.

4.2 Trigger Function

Trigger Source Settings

Two trigger sources are available: internal and external.

Internal Trigger	Trigger signals are automatically generated internally. (free-run)
External Trigger	Trigger signals are provided externally or manually.

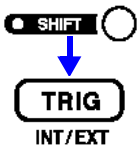

(The SHIFT indicator lights up.)

Switches the selected trigger source.

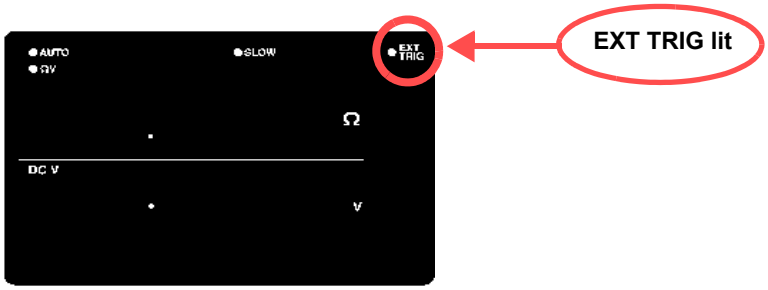

EXT.TRIG lit..... External triggering is selected.
EXT.TRIG not lit..... Internal triggering is selected.

Measurement with External Triggering

An external trigger can be applied in three ways.

- Applying a trigger manually by operating key
  Pressing the **TRIG** key causes one measurement.
- Applying a trigger at the EXT I/O connector.
  Shorting the $\overline{\text{TRIG}}$ terminal to the ISO_COM of the EXT I/O connector on the rear panel causes one measurement.
  See " Input Signals" (⇒ p.77).
- Applying a trigger through RS-232C or GP-IB interface
  Sending the ***TRG** command via the RS-232C or GP-IB interface causes one measurement.

NOTE

- When Internal triggering is enabled, external input at the EXT I/O $\overline{\text{TRIG}}$ terminal and the ***TRG** command are ignored.
- The normal state of operation with the front panel controls is continuous measurement. Setting the trigger source to Internal enables the free-run condition in which triggering occurs continuously. When the trigger source is set to External, a measurement occurs each time an external trigger is applied. Continuous measurement can be disabled via RS-232C or GP-IB interface signals, in which case triggering occurs only when signaled by the external host (PC or PLC).
  See " Triggering System Description" (⇒ p.145).

Trigger Delay Settings

Specify the delay from the moment a trigger is applied to the start of measurement. By using this function, even when a trigger is applied immediately after connecting a test object, the start of measurement can be delayed to allow sufficient time for the measurement value to stabilize. Trigger delay can be set with 1 ms resolution from 0.000 to 9.999 seconds.

1 SHIFT → STAT DELAY

(The SHIFT indicator lights up.)

The Trigger Delay setting display appears.

(Main display)

(Sub display)
The current setting blinks.

2

Select **ON**.

(Sub display)

3

The numerals indicating the trigger delay blink.

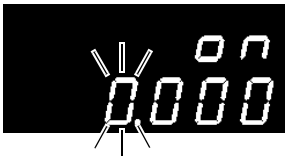

(Sub display)

4

Or numeric keypads

Set the trigger delay.

5 ENTER

Applies the setting and returns to the Measurement display.
To cancel the settings: **SHIFT** key

Disabling the Trigger Delay Function

1 SHIFT → STAT DELAY

(The SHIFT indicator lights up.)

The Trigger Delay setting display appears.

2

Select **OFF**.

(Sub display)

3 ENTER

The Trigger Delay is disabled.

4.3 Averaging Function

The Averaging Function averages measurement values for output. This function can minimize instability of displayed values. The number of samples to average can be set from 2 to 16.

1 SHIFT → SMPL AVG

(The SHIFT indicator lights up.)

The Averaging Function setting display appears.

(Main display)

(Sub display)
The current setting blinks.

2 Select **ON**.

(Sub display)

3 The number of samples to average setting blinks.

4 Select the number of samples to average.

Or
numeric keypads

5 ENTER

The Average Measurement display appears. (**AVG** lit)
To cancel the settings: **SHIFT** key

Disabling the Averaging Function

1 SHIFT → SMPL AVG

(The SHIFT indicator lights up.)

The Averaging Function setting display appears.

2 Select **OFF**.

(Sub display)

3 ENTER

The Averaging Function is disabled. (**AVG** not lit)

NOTE

When the internal trigger is used for continuous measurement (free-run), the display shows the moving average. Otherwise, the display shows the integrating average.
See "4.2 Trigger Function" (⇒ p.57).

4.4 Statistical Calculation Functions

The mean, maximum, minimum, standard deviation of population, standard deviation of sample and process capability indices are calculated and displayed for up to 30000 measurement values.

The calculation formulas are as follows:

Mean

$$\bar{x} = \frac{\sum x}{n}$$

Standard deviation of population

$$\sigma = \sqrt{\frac{\sum x^2 - n\bar{x}^2}{n}} \quad (= \sigma_n)$$

Standard deviation of sample

$$s = \sqrt{\frac{\sum x^2 - n\bar{x}^2}{n-1}} \quad (= \sigma_{n-1})$$

Process capability index (dispersion)

$$Cp = \frac{|Hi - Lo|}{6\sigma_{n-1}}$$

Process capability index (bias)

$$CpK = \frac{|Hi - Lo| - |Hi + Lo - 2\bar{x}|}{6\sigma_{n-1}}$$

- In these formulas, n represents the number of valid data samples.
- Hi and Lo are the upper and lower thresholds of the comparator.
- The process capability indices represent the quality achievement capability created by a process, which is the breadth of the dispersion and bias of the process' quality. Generally, depending on the values of Cp and CpK, process capability is evaluated as follows:
  Cp, CpK>1.33..... Process capability is ideal
  1.33 ≥ Cp, CpK>1.00..... Process capability is adequate
  1.00 ≥ Cp, CpK..... Process capability is inadequate

NOTE

- When only one valid data sample exists, standard deviation of sample and process capability indices are not displayed.
- When σ_{n-1} is 0, Cp and CpK are 99.99.
- The upper limit of Cp and CpK is 99.99. Values of Cp and CpK>99.99 are displayed as 99.99.
- Negative values of CpK are handled as CpK=0.
- When comparator, range or auto-ranging settings are changed while statistical data is displayed, the display of Cp and CpK values changes to “- - . - -”.
- When normal measurement values and relative display values (%) are mixed, correct calculation results cannot be obtained.

Enabling/Disabling the Statistical Calculation Function

1 STAT

The Statistical Calculation display appears.

(Main display)

(Sub display)

2 (press three times)

The function enable/disable display appears.

(Sub display)

Enable or disable the Calculation Function on the sub display.
on..... enables the calculation function on.
oFF ..... disables the calculation function off.

3 ENTER

Applies the setting and returns to the Measurement display.
To cancel the settings: **SHIFT** key

NOTE

- Statistical Calculation function setting (ON, OFF) is not available when the Comparator is enabled.
- If Statistical Calculation is turned off and then back on without first clearing calculation results, it resumes calculating from the point when it was turned off.
- The Statistical Calculation function slows measurements when it is ON.

Clearing Statistical Calculation Results

1 STAT

The Statistical Calculation display appears.

(Main display)

(Sub display)

2 (press once)

The Clearing screen will appear.

(Sub display)

3 ENTER

Clears statistical calculation results.

Automatic Clearing of Statistical Calculation Results after Printing

The instrument can be set to automatically clear statistical calculation results after results are output to the printer.

1 STAT

The Statistical Calculation display appears.

(Main display)

(Sub display)

2 (Press twice)

Bring up Auto Clearing After Printing in the Setup screen.

(Sub display)

3

Turn Automatic Clearing After Printing on or off.

on..... Automatically clears statistical calculation results after they are output to the printer.

oFF..... Does not clear the results themselves.

4 ENTER

Applies the setting and returns to the Measurement display.
To cancel the settings: **SHIFT** key

Importing Data

TRIG

Pressing the **TRIG** key while Statistical Calculation is ON executes one of the following operations:

- External Trigger: Takes one measurement and performs statistical calculation on the result
- Internal Trigger: Performs statistical calculation on the value displayed immediately after pressing

NOTE

- ∗**TRG** command executes the same operation.
- Shorting the $\overline{\text{TRIG}}$ terminal to the ISO_COM of the EXT I/O connector executes the same operation.

Confirming Statistical Calculation Results

1 STAT

The Statistical Calculation display appears.

2

The indication on the display changes as follows with each key-press.

Example: when the ΩV mode is selected
(not displayed in V mode)

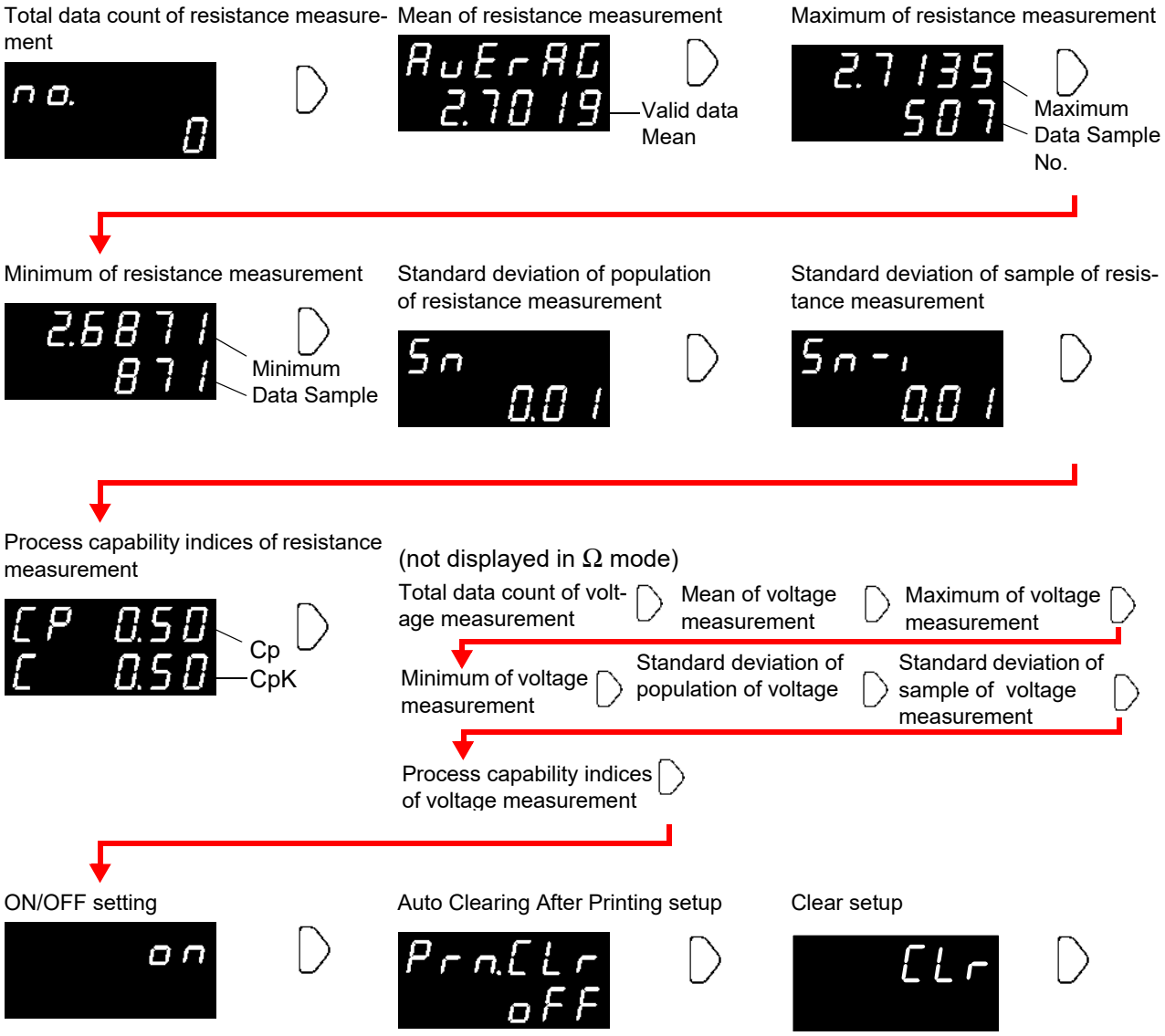

NOTE

- When a valid data count (measurement fault other than ± OF) is zero, no calculation result is displayed.
- When only one valid data sample exists, standard deviation of sample and process capability indices cannot be displayed.
- When comparator, range or auto-ranging settings are changed while statistical data is displayed, the display of Cp and CpK values changes to "- - . - -".

Sending Statistical Calculation Results to the Printer

PRINT

With the statistical calculation results displayed, press the **PRINT** key. The statistical calculation results are output to the optional printer.
See "Chapter 6 Printing" (⇒ p.87).

4.5 Memory Function

The Memory function is only available via communication commands.
When the Memory function is enabled, measurement values are stored in the instrument's internal memory according to trigger input sequence (up to 400 values). Stored data can be downloaded later upon command.
When measuring using a scanner to switch multiple test objects, switching time can be quite long if measurement values are downloaded to the PC after each measurement. Test cycle time can be minimized by using this function to store measurement values internally until all channel measurements are finished, at which time the stored values are downloaded together during the next idle period.

1 Select the RS-232C or GP-IB interface.
See " Selecting the Communication Conditions" (⇒ p.100).

2 Send the command to enable the Memory function.
`:MEMory:STATe ON`

3 The MEM indicator lights.

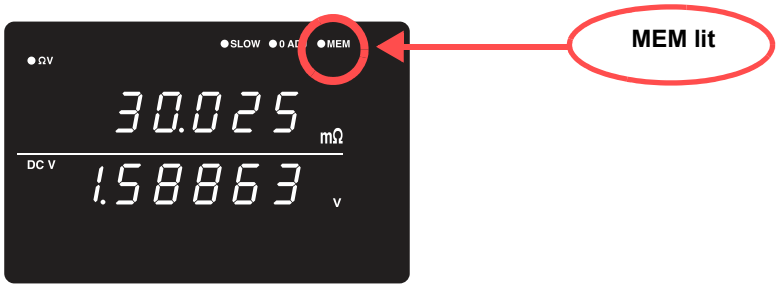

4 Measurement values are stored.
When a trigger is applied by the **TRIG** key, $\overline{\text{TRIG}}$ EXT I/O input signal or ∗**TRG** command, the MEM indicator blinks once and the measured value is stored.

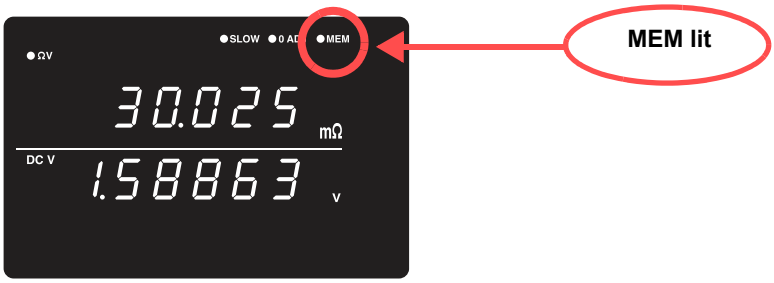

If an external trigger source is selected, one measurement is stored after each trigger event. In the internal triggering case, the first measurement value after triggering is stored. Apply a trigger as many times as is necessary.

5 Send the command to download the data from memory.

```
:MEMory:DATA?
```

The stored measurement values are returned in response.

```
:MEM:DATA?
1,  290.60E-3,  1.3924E+0
2,  290.54E-3,  1.3924E+0
3,  290.50E-3,  1.3923E+0
4,  290.43E-3,  1.3923E+0
5,  290.34E-3,  1.3924E+0
END
```

The “END” character is sent as the last line of the data.

To download stored data one measurement at a time, send this command:

```
:MEMory:DATA? STEP
```

The instrument sends one stored data object and enters the wait state.
When the instrument receives an “N” from the PC or other device, the next stored data object is sent.
Repeat until the last data object is downloaded.
When all stored data has been downloaded, the instrument sends an “END” character.

```
:MEM:DATA? STEP
1,  290.60E-3,  1.3924E+0
N                          (sent from PC)
2,  290.54E-3,  1.3924E+0
N                          (sent from PC)
3,  290.50E-3,  1.3923E+0
N                          (sent from PC)
4,  290.43E-3,  1.3923E+0
N                          (sent from PC)
5,  290.34E-3,  1.3924E+0
N                          (sent from PC)
END
```

6 To clear the instrument's memory, send it the following command.

```
:MEMory:CLEAr
```

Unless the memory is cleared, measurement data continues to be stored upon each trigger event.

NOTE

- The instrument's memory storage capacity is 400 measurements. Be aware that attempting to store more data (by applying a trigger) results in nothing further being stored.
- Refer to "Chapter 8 RS-232C/GP-IB Interfaces" (⇒ p.95), for details about the communication methods and sending and receiving commands.
- When the Memory function is enabled, auto-ranging is not available.
- Memory contents are cleared when performing the following operations:
  When enabling the Memory function (off to on)
  When changing the measurement range
  When changing comparator settings
  When sending the `:Memory:Clear` command
  When Reset is executed from the menu display
  When sending `*RST`
  When sending `:SYSTem:RESet`
  When turning power on
- When the measurement mode is set to Ω or V, a measurement error value will be returned for functions that are not being measured.

Disabling the Memory Function

1 Send the command to enable the Memory function Off.
`:MEMory:STATe OFF`

2 The Memory function is disabled. (**MEM** not lit)

4.6 Key-Lock Function

Executing Key-Lock disables the operating keys on the front of the instrument. This function can be useful for protecting settings.

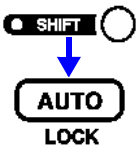

(The SHIFT indicator lights up.)

Enable the Key-Lock function.

NOTE

- Even if the power supply is interrupted, the Key-Lock function is not canceled.
- The **TRIG** key remains operational.

Disabling Key-Lock

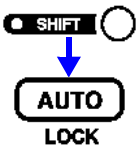

(The SHIFT indicator lights up.)

Disable the Key-Lock function. (LOCK is not lit)

NOTE

When communicating by remote control, the remote control status is canceled.

4.7 Panel Save Function

The current measurement setting state is stored (saved) in non-volatile memory.
Up to 126 sets of measurement states can be saved.
The measurement settings (state) at the time this function is executed are saved.
Saved measurement states can be reloaded using the Panel Load function, described later.

1 SHIFT → LOAD / SAVE

(The SHIFT indicator lights up.)

The Panel Saving display appears.

(Main display)

(Sub display)
The panel number blinks.

2 Or numeric keypads

Select the panel number to save.

(Sub display)
(To save measurement settings as Panel No. 3)

When selecting a saved panel, "**USEd**" is displayed.

3 ENTER

Saves the measurement setting state and returns to the Measurement display.
To cancel the settings: **SHIFT** key

NOTE

- If you select a Panel number that was previously saved and press the **ENTER** key, the contents are overwritten.
- The Key-Lock state can be saved only by the **:SYSTem:SAVE** remote command.

Saved Items

- Measurement mode setting
- Range setting
- Auto-ranging setting
- Sampling rate setting
- Comparator settings
- Internal/External trigger setting
- Switching displays setting
- Delay setting
- Zero-Adjust setting
- Averaging setting
- Key-Lock
- Statistical Calculation setting

(The absolute value judgment function setting is not saved.)

4.8 Panel Load Function

Loads the measurement settings saved by the Panel Save function from internal non-volatile memory.

1 LOAD

The Panel Loading display appears.

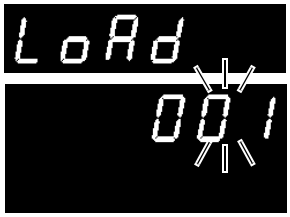

(Main display)

(Sub display)
The panel number blinks.

2

Or
numeric keypads
numeric keypads

Select the panel number to load.

(Sub display)
(To load measurement settings from Panel No.3)

3 ENTER

Loads the measurement setting state and returns to the Measurement display.
To cancel the settings: **SHIFT** key

NOTE

- If an unsaved Panel No. is selected, a warning beep sounds when you press **ENTER** key.
- When selecting a Panel No. with the up/down **RANGE** keys, only the numbers of previously saved panels appear.
- Loading can also be executed using the $\overline{\text{TRIG}}$ signal and the $\overline{\text{LOAD0}}$ to $\overline{\text{LOAD6}}$ pins of the EXT I/O interface.

See " Input Signals" (⇒ p.77).

4.9 Self-Calibration

The self-calibration function adjusts offset voltage and gain drift of the instrument's internal circuitry to improve measurement precision.
The instrument's measurement accuracy specifications depend on self-calibration, so it must be executed frequently. In particular, always execute self-calibration after warm-up and when the ambient temperature changes by more than 2°C. However, regardless of this setting, self-calibration is executed during every measurement when SLOW sampling is used.

Self-calibration can be executed by the following two methods:

Auto	Executes self-calibration automatically once every 30 minutes.
Manual	Self-calibration can be executed manually by applying a $\overline{\text{CAL}}$ input signal (shorting the $\overline{\text{CAL}}$ terminal to the ISO_COM of the EXT I/O connector). It can also be executed with the SYSTem:CALibration command. (⇒ p.139)

1 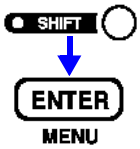

(The SHIFT indicator lights up.)

The Menu display appears.

2

The Self-Calibration setting display appears.
See "1.4 Menu Display Sequence (SHIFT > ENTER)" (⇒ p.13).

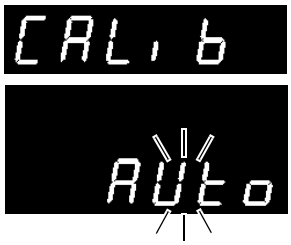

(Main display)

(Sub display)
The current setting blinks.

3

Select Auto or Manual on the sub display.
AUto ..... Auto self-calibration
in..... Manual self-calibration

4

Applies the setting and returns to the Measurement display.

NOTE

Self-calibration requires about 176 ms (power supply frequency: 50 Hz) or about 151 ms (power supply frequency: 60 Hz), during which measurement processing is temporarily suspended.

4.10 Measurement Value Output Function

This function causes output of measured values via the RS-232C interface in the same sequence as trigger input.
This function is useful when measuring using internal (free-run) triggering, and for obtaining measured values on a PC when using a footswitch for triggering.

1 SHIFT → ENTER (MENU)

(The SHIFT indicator lights up.)

The Menu display appears.

2

The Measurement Value Output function setting display appears.
See "1.4 Menu Display Sequence (SHIFT > ENTER)" (⇒ p.13).

(Main display)

(Sub display)
The current setting blinks.

3

Turn Measurement Value Output Function on or off.
on..... enables the measurement value output function on.
oFF..... disables the measurement value output function off.

4 ENTER

Applies the setting and returns to the Measurement display.

5 TRIG

The measured value is output from the RS-232C interface when you press the **TRIG** key or when a signal is applied to the EXT I/O TRIG terminal.
Set the PC to the receiving state beforehand. When a measurement value is received, the PC should perform appropriate processing such as recording or displaying, then re-enable the receiving state.

NOTE

- When external triggering is enabled, a measurement is performed and the value is sent after each trigger event. When internal triggering is enabled, the first value measured after triggering is sent.
- The measurement output function is not applicable to the GP-IB interface or printer.

4.11 Key Beeper Setting

Select whether a beep sounds when an operating key on the front of the instrument is pressed.

1 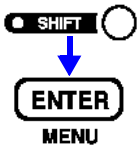

(The SHIFT indicator lights up.)

The Menu display appears.

2

The Key Beeper setting display appears.
See "1.4 Menu Display Sequence (SHIFT > ENTER)" (⇒ p.13).

(Main display)

(Sub display)
The current setting blinks.

3

Select the key beeper state on the sub display.
on..... Key beeper enabled.
oFF ..... Key beeper disabled.

4

Applies the setting and returns to the Measurement display.

4.12 Reset Function

The reset function can be used to re-initialize current measurement settings (excluding saved panel data) to their factory defaults, or to re-initialize all measurement settings including saved panel data to factory defaults.

1 SHIFT → ENTER MENU

(The SHIFT indicator lights up.)

The Menu display appears.

2

The Reset display appears.
See "1.4 Menu Display Sequence (SHIFT > ENTER)" (⇒ p.13).

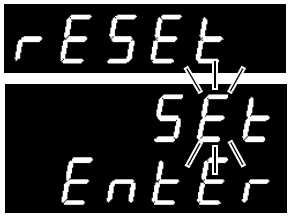

(Main display)

(Sub display)
The current setting blinks.

3

Select the Reset method on the sub display.
SEt ..... Reset (initializes measurement settings other than those stored with Panel Save)
SYS ..... System Reset (initialize all measurement settings)

4

ENTER blinks.

(Sub display)

When SYS (system reset) is selected

5 ENTER

Executes the Reset.

To cancel the settings: **SHIFT** key

NOTE System Reset also initializes Panel Save data.

Initial Factory Default Settings

Description	Default
Measurement Mode	ΩV
Resistance Measurement Range	3 mΩ
Voltage Measurement Range	10 V
Auto Range	ON
Zero-Adjust	OFF
Delay	OFF
Delay Time	0.000s
Sampling Rate	SLOW
Averaging Function	ON
Average Times	4
Self-Calibration	AUTO
Continuous Measurement	ON
Trigger Source	Internal trigger
Line Frequency	AUTO
Key Beeper Setting	ON
Key-Lock Function	OFF
Comparator	OFF
Comparator Threshold Method (resistance and voltage)	Hi, Lo
Comparator Upper Threshold (resistance and voltage)	0
Comparator Lower Threshold (resistance and voltage)	0
Comparator Judgment Beeper	OFF
Comparator Mode	AUTO
Statistical Calculation Functions	OFF
Automatic Clearing of Statistical Calculation Results	OFF
Interface	RS-232C
Baud Rate	9600 bps
GP-IB Address	1
GP-IB Delimiter	LF
Print Interval	0 (The interval print disabled)
Error Output	ASync
Measurement Value Output Function	OFF
EOM Output	HOLD
EOM Pulse Width	1 ms
Comparator absolute value judgment function	OFF

External Control (EXT I/O) Chapter 5

5.1 Overview

External Control Input Functions

- External trigger input ($\overline{\text{TRIG}}$)
- Select Panel No. to load ($\overline{\text{LOAD0}}$ to $\overline{\text{LOAD6}}$)
- Zero-adjust signal input ($\overline{\text{0ADJ}}$)
- Print Signal input ($\overline{\text{PRINT}}$)
- Self-calibration signal input ($\overline{\text{CAL}}$)
- Manual comparator judgment input ($\overline{\text{MANU}}$)

External Output Terminal Functions

- End-of-Conversion signal output ($\overline{\text{EOM}}$)
- Reference signal output ($\overline{\text{INDEX}}$)
- Measurement Fault signal output ($\overline{\text{ERR}}$)
- Comparator decision signal output ($\overline{\text{R-Hi}}$, $\overline{\text{R-IN}}$, $\overline{\text{R-Lo}}$, $\overline{\text{V-Hi}}$, $\overline{\text{V-IN}}$, $\overline{\text{V-Lo}}$, $\overline{\text{PASS}}$, $\overline{\text{FAIL}}$)

⚠WARNING

To avoid electric shock or damage to the equipment, always observe the following precautions when connecting to the EXT I/O terminals.

- **Always turn off the power to the instrument and to any devices to be connected before making connections.**
- **During operation, a wire becoming dislocated and contacting another conductive object can be serious hazard. Make sure that connections are secure and use screws to secure the external connectors.**
- **Ensure that devices and systems to be connected to the EXT I/O terminals are properly isolated.**

⚠CAUTION

To avoid damage to the instrument, observe the following cautions:

- Do not apply voltage or current to the EXT I/O terminals that exceeds their ratings.
- When driving relays, be sure to install diodes to absorb counter-electromotive force.
- Be careful not to short-circuit ISO_5V to ISO_COM.

See: "5.2 Signal Descriptions" (⇒ p.76)

5.2 Signal Descriptions

Pinout

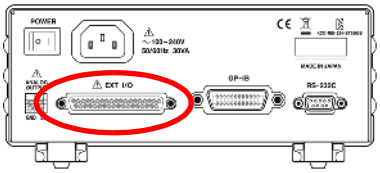

Connector: (Instrument Side)
37-pin D-sub female with #4-40 screws

Mating Connectors:
DC-37P-ULR (solder type) /
DCSP-JB37PR (pressure weld type)
Japan Aviation Electronics Industry Ltd.
Other equivalent parts

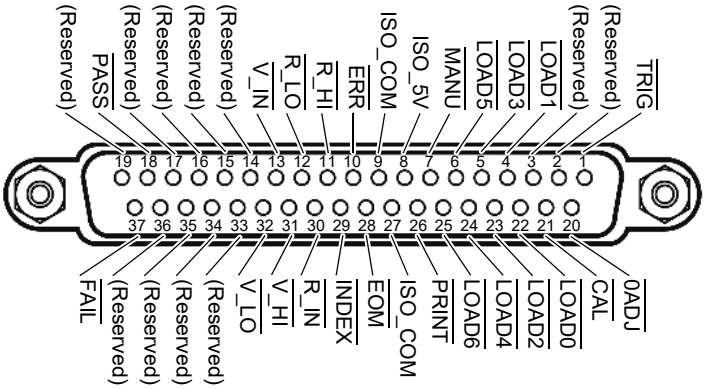

EXT I/O Connector

Pos: positive, Neg: negative, –: not applicable

Pin	Signal name	I/O	Function	Logic	
1	$\overline{\text{TRIG}}$	IN	External trigger	Neg	Edge
2	(Reserved)	–	–	–	–
3	(Reserved)	–	–	–	–
4	$\overline{\text{LOAD1}}$	IN	Load no. bit 1	Neg	Level
5	$\overline{\text{LOAD3}}$	IN	Load no. bit 3	Neg	Level
6	$\overline{\text{LOAD5}}$	IN	Load no. bit 5	Neg	Level
7	$\overline{\text{MANU}}$	IN	Comparator manu-al control	Neg	Level
8	ISO_5V	–	Isolated 5 V power output	–	–
9	ISO_COM	–	Isolated common signal ground	–	–
10	$\overline{\text{ERR}}$	OUT	Measurement fault	Neg	Level
11	$\overline{\text{R_HI}}$	OUT	HI resistance judgment result	Neg	Level
12	$\overline{\text{R_LO}}$	OUT	LO resistance judg-ment result	Neg	Level
13	$\overline{\text{V_IN}}$	OUT	IN voltage judg-ment result	Neg	Level
14	(Reserved)	OUT	–	–	–
15	(Reserved)	OUT	–	–	–
16	(Reserved)	OUT	–	–	–
17	(Reserved)	OUT	–	–	–
18	$\overline{\text{PASS}}$	OUT	PASS judgment re-sult	Neg	Level
19	(Reserved)	OUT	–	–	–

Pin	Signal name	I/O	Function	Logic	
20	$\overline{\text{0ADJ}}$	IN	Zero adjustments	Neg	Edge
21	$\overline{\text{CAL}}$	IN	Self-calibration execution	Neg	Edge
22	$\overline{\text{LOAD0}}$	IN	Load no. bit 0	Neg	Level
23	$\overline{\text{LOAD2}}$	IN	Load no. bit 2	Neg	Level
24	$\overline{\text{LOAD4}}$	IN	Load no. bit 4	Neg	Level
25	$\overline{\text{LOAD6}}$	IN	Load no. bit 6	Neg	Level
26	$\overline{\text{PRINT}}$	IN	Print measured val-ue	Neg	Edge
27	ISO_COM	-	Isolated common signal ground	–	–
28	$\overline{\text{EOM}}$	OUT	End of measurement	Neg	Edge
29	$\overline{\text{INDEX}}$	OUT	Mesurement refer-ence signal	Neg	Level
30	$\overline{\text{R_IN}}$	OUT	IN resistance judgment result	Neg	Level
31	$\overline{\text{V_HI}}$	OUT	Hi voltage judgment result	Neg	Level
32	$\overline{\text{V_LO}}$	OUT	Lo voltage judgment result	Neg	Level
33	(Reserved)	–	–	–	–
34	(Reserved)	–	–	–	–
35	(Reserved)	–	–	–	–
36	(Reserved)	–	–	–	–
37	$\overline{\text{FAIL}}$	OUT	Judgment result FAIL	Neg	Level

Reserved pins are not connected inside the instrument.
Do not connect to reserved pins.

NOTE The connector frame is connected to (continuous with) both the instrument's case (the metal cabinet surrounding the instrument) and the power inlet's protec-tive ground pin. Note that the frame is not isolated from the ground.

Input Signals

$\overline{\text{LOAD0}}$ to $\overline{\text{LOAD6}}$

Select a Panel No. to load and apply a $\overline{\text{TRIG}}$ signal to load the selected Panel No. and measure. $\overline{\text{LOAD0}}$ is the LSB, and $\overline{\text{LOAD6}}$ is the MSB.
When a TRIG signal is applied, if $\overline{\text{LOAD0}}$ through $\overline{\text{LOAD6}}$ are unchanged from the previous trigger event, panel settings are not loaded. In this case, using external triggering, one measurement is taken as usual when the $\overline{\text{TRIG}}$ signal is applied.

Panel No.	$\overline{\text{LOAD6}}$	$\overline{\text{LOAD5}}$	$\overline{\text{LOAD4}}$	$\overline{\text{LOAD3}}$	$\overline{\text{LOAD2}}$	$\overline{\text{LOAD1}}$	$\overline{\text{LOAD0}}$
*	0	0	0	0	0	0	0
1	0	0	0	0	0	0	1
2	0	0	0	0	0	1	0
3	0	0	0	0	0	1	1
4	0	0	0	0	1	0	0
5	0	0	0	0	1	0	1
6	0	0	0	0	1	1	0
7	0	0	0	0	1	1	1
8	0	0	0	1	0	0	0
...							
122	1	1	1	1	0	1	0
123	1	1	1	1	0	1	1
124	1	1	1	1	1	0	0
125	1	1	1	1	1	0	1
126	1	1	1	1	1	1	0
*	1	1	1	1	1	1	1

0: HIGH: Open or from 5 V to 24 V
1: LOW: 0 V to 0.9 V

* When a $\overline{\text{TRIG}}$ signal is applied with $\overline{\text{LOAD0}}$ to $\overline{\text{LOAD6}}$ set to all 1's or all 0's, no Panel Load occurs.

- At least 70 ms is required for the settings to change after executing a Panel Load (the actual time depends on the particular function, range and sampling rate).
- When set to external trigger mode, one measurement is taken upon load completion.

$\overline{\text{TRIG}}$

When the external trigger, one measurement is taken each time the $\overline{\text{TRIG}}$ signal transitions from High to Low.
This trigger signal is ignored when internal triggering is enabled.
Trigger functions are also available for statistical calculation, recording to memory and output of measured values (valid also with internal triggering).

$\overline{\text{CAL}}$

When manual self-calibration is selected with FAST or MEDIUM sampling rate, self-calibration begins when the $\overline{\text{CAL}}$ signal transitions from High to Low.
Self-calibration takes about 176 ms (power supply frequency: 50 Hz) or about 151 ms (ower supply frequency: 60 Hz).
When SLOW sampling is selected, the $\overline{\text{CAL}}$ signal is ignored.
See "4.9 Self-Calibration" (⇒ p.69).

$\overline{0ADJ}$	Zero adjustment executes once when the $\overline{0ADJ}$ signal transitions from High to Low.
$\overline{PRINT}$	The current measurement value prints when the $\overline{PRINT}$ signal transitions from High to Low.
$\overline{MANU}$	When the $\overline{MANU}$ comparator mode is selected, comparator judgment is enabled while the $\overline{MANU}$ signal is Low. **See** " Comparator Mode Setting" (⇒ p.50).

Output Signals

$\overline{ERR}$	Indicates a measurement fault. The Synchronous $\overline{ERR}$ output setting causes $\overline{ERR}$ output to be synchronous with $\overline{EOM}$ output, while with the Asynchronous $\overline{ERR}$ output setting causes $\overline{ERR}$ output to follow actual (asynchronous) contact of the probes with the test object. **See** " ERR Output" (⇒ p.79).
$\overline{INDEX}$	The $\overline{INDEX}$ signal is output during the Trigger Wait, Delay, Self-Calibration and Calculation states. This signal is not output while measuring the resistance of test objects. This signal transitions from Hi (Off) to Lo (On) to indicate that the test object can be removed.
$\overline{EOM}$	This signal indicates the end of a measurement (End-Of-Conversion). This signal indicates when comparator judgment results and $\overline{ERR}$ output (when SYNC is enabled) are available.
$\overline{R\text{-}Hi}$, $\overline{R\text{-}IN}$, $\overline{R\text{-}Lo}$ $\overline{V\text{-}Hi}$, $\overline{V\text{-}IN}$, $\overline{V\text{-}Lo}$	These are the results of comparator decision.
$\overline{PASS}$	This signal indicates Low (ON) when both resistance and voltage judgment results are IN (ΩV mode). In the Ω and V modes, this signal is the same as $\overline{R\text{-}IN}$ and $\overline{V\text{-}IN}$ outputs, respectively.
$\overline{FAIL}$	This signal transitions to Low (ON) when $\overline{PASS}$ is High (OFF).

NOTE

- I/O signals should not be used while measurement settings have been changed.
- The $\overline{EOM}$ and $\overline{INDEX}$ signals are initialized HIGH (OFF) at power on.
- If it is not necessary to change the measurement conditions, set $\overline{LOAD0}$ through $\overline{LOAD6}$ to either Hi or Lo.
- To avoid erroneous comparator judgments, both the $\overline{PASS}$ and $\overline{FAIL}$ signals should be checked.

ERR Output

The ERR output signal indicates the occurrence of measurement fault conditions (such as open test leads, or a bad contact).
There are two ERR output methods.

Synchronized with EOM Output (SYNC)

Measurement faults detected while measuring (not while awaiting trigger or during delay or calculation intervals), are indicated by ERR output synchronous with EOM output (the end-of-measurement signal).

ERR Output Low (On): A measurement fault has prevented correct measurement

ERR Output High (Off): Correct measurement obtained (OF or -OF: Out-of-range cases are included)

Asynchronous with EOM Output (ASYNC)

Measurement faults (test lead connection conditions) are output in real time. The output is asynchronous with the $\overline{\text{TRIG}}$ signal and EOM output.

ERR Output Low (On): Measurement fault condition (open test leads, or a bad contact)

ERR Output High (Off): Test lead connections are normal

Instrument Settings

Measurement Fault Output Signal ($\overline{\text{ERR}}$) Setting

1 SHIFT → ENTER (MENU)

(The SHIFT indicator lights up.)

The Menu display appears.

2

Select the ERR Output Selection display.
See "1.4 Menu Display Sequence (SHIFT > ENTER)" (⇒ p.13).

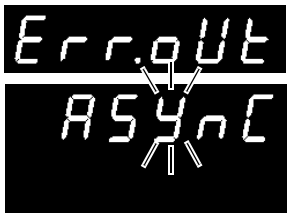

(Main display)

(Sub display)
The current setting blinks.

3

Select the type of signal to be output on the sub display.
SynC ..... Synchronous output (synchronized with EOM output)
ASynC ..... Asynchronous output (not synchronized with EOM output)

4 ENTER

Applies the settings and returns to the Measurement display.

Setting the $\overline{\text{EOM}}$ Signal

1 SHIFT → ENTER (MENU)

(The SHIFT indicator lights up.)

The Menu display appears.

2

Select the $\overline{\text{EOM}}$-signal setup display.
See "1.4 Menu Display Sequence (SHIFT > ENTER)" (⇒ p.13).

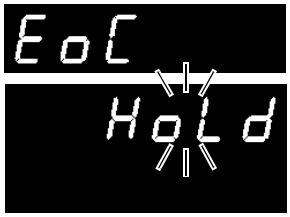

(Main display)

(Sub display)
The current setting blinks.

3

Choose the output method for the $\overline{\text{EOM}}$ signal.
HoLd ..... Holds the $\overline{\text{EOM}}$ signal after measurement.
→ Go to Step 5.
PULSE ..... Outputs the specified pulse after measurement.
→ Go to the next step.

4

Or numeric keypads

(When PULSE is selected)
The number representing the pulse width of the $\overline{\text{EOM}}$ signal will start blinking.
Set the pulse width in ms.

5 ENTER

Applies the settings and returns to the Measurement display.

5.3 Timing Chart

External Trigger Timing Chart

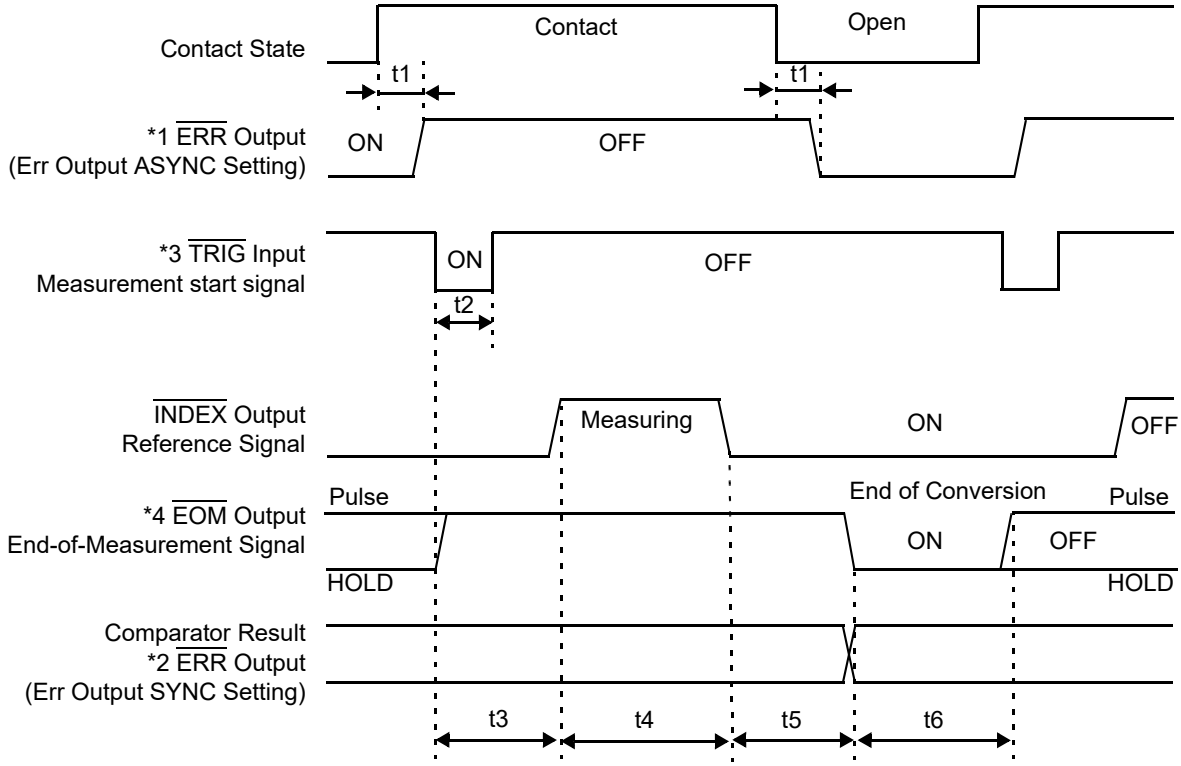

*1: For details, see “"ERR Output"(⇒ p.79).”
*2: When ERR output is set to the SynChronous mode, measurement fault detection results can be obtained when measurement is finished, as with comparator results.
*3: After connecting to the test object, wait for longer than the response time (approximately 700 ms) before inputting the TRIG signal (It is necessary to wait out the response time for the measurement values to stabilize after connection. Response times depend on the test object).
*4: When the EOM signal is set to pulse output, the signal will only turn on for the specified time after conversion is complete.

Internal Trigger Timing Chart

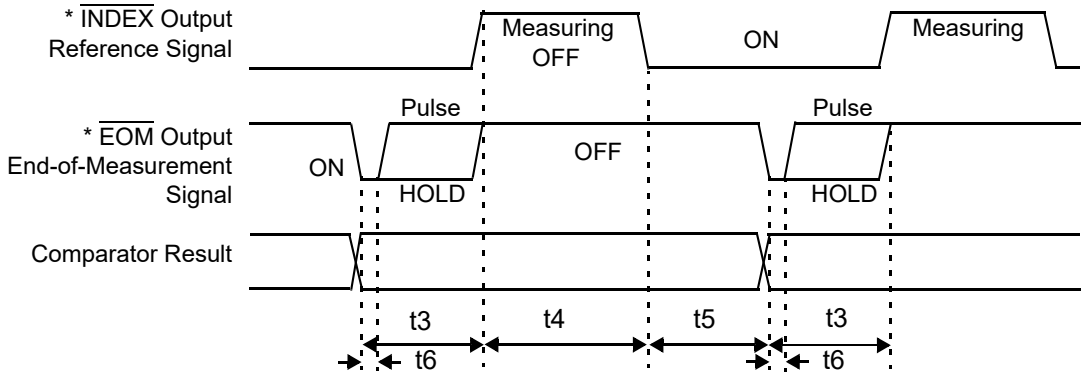

* When the EOM signal is set to PULSE, the signal will remain on only for the specified period upon completion of conversion.

Description		Time
t1	$\overline{\text{ERR}}$ Output response time*1	1.5 ms
t2	Measurement trigger pulse width	0.5 ms or more.
t3	Delay Time + response time	Specified delay time + response time of 700 ms (except when performing voltage measurement alone) **See** "Trigger Delay Settings"(⇒ p.58).
t4	Measurement time*2	**See** "Sampling time"(⇒ p.166) of "9.2 Basic Specifications"
t5	Calculation time*3	0.3 ms
t6	$\overline{\text{EOM}}$ Output pulse width	When the external trigger is selected HOLD setting : Holds until the next trigger is detected PULSE setting : Remains only for the specified pulse width **See** "Instrument Settings"(⇒ p.80). When the internal trigger is selected HOLD setting : FAST 5 ms, MEDIUM 20 ms (50 Hz line frequency setting)/ 16 ms (60 Hz line frequency setting), SLOW 50 ms PULSE setting : Remains only for the specified pulse width

*1: For details, see “"ERR Output"(⇒ p.79).”

*2: About t4 measurement time
When averaging is enabled and the internal trigger setting, which calculates running average values, is used, the self-calibration is executed before every measurement. On the other hand, when the external trigger is used, it is executed only before a measurement used as the first of a series of measurements for calculating a simple values.

*3: About t5 calculation time
In the following cases, add the indicated times to calculation time t5:

When the Statistical Calculation function is enabled	0.3 ms
When the reference value/tolerance method of comparator decision is selected	0.15 ms

5.4 Internal Circuitry

Input Circuit

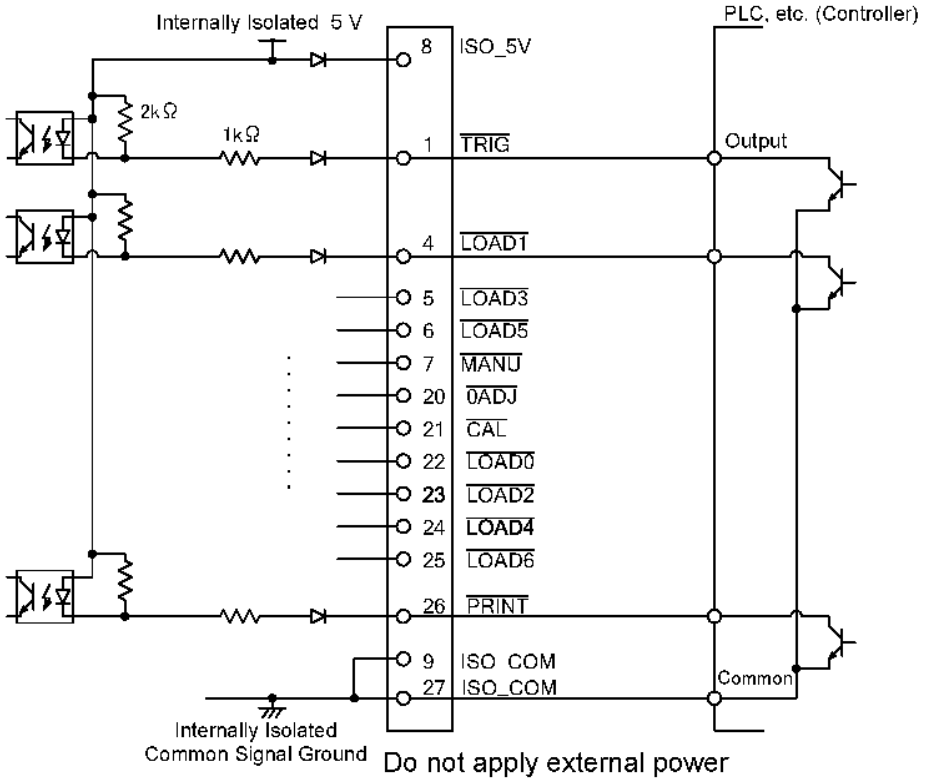

Output Circuit

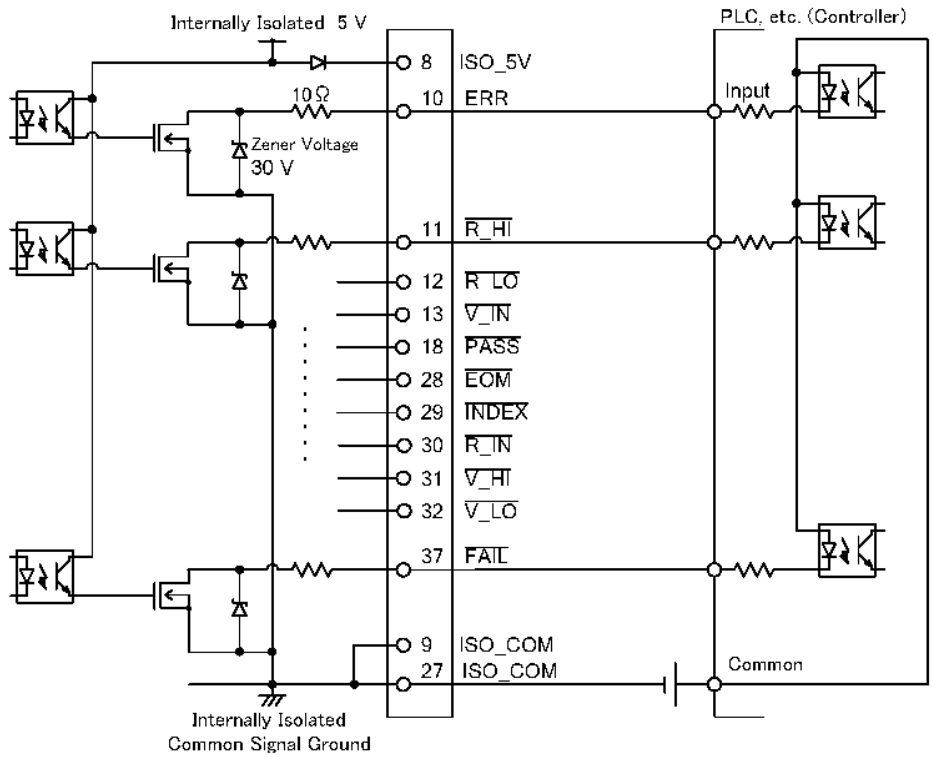

Electrical Specifications

Input Signals	Input type	Optocoupler-isolated, non-voltage contact inputs (source input, active-low)
	Input asserted (ON) voltage	1 V or less
	Input de-asserted (OFF) voltage	Open or 5 to 30 V
	Input asserted (ON) current	3 mA/ch
	Maximum applied voltage	30 V
Output Signals	Output type	Optocoupler-isolated Nch open-drain outputs (current sink)
	Maximum load voltage	30 V
	Maximum output current	50 mA/ch
	Residual voltage	1 V (10 mA), 1.5 V (50 mA)
Internally Isolated Power Output	Output Voltage	4.5 to 5.0 V
	Maximum output current	100 mA
	External power input	none

Connection Examples

Input Circuit Connection Examples

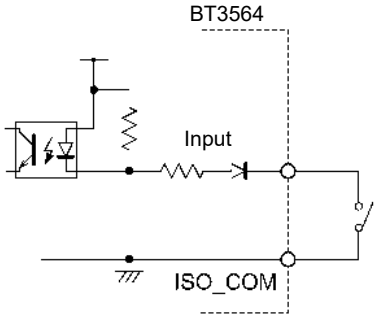

Switch Connections

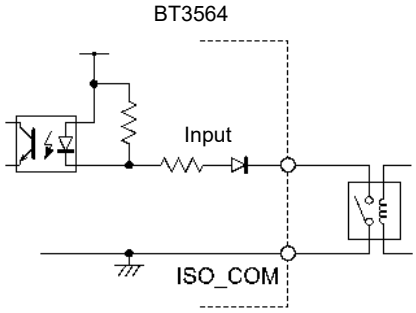

Relay Connections

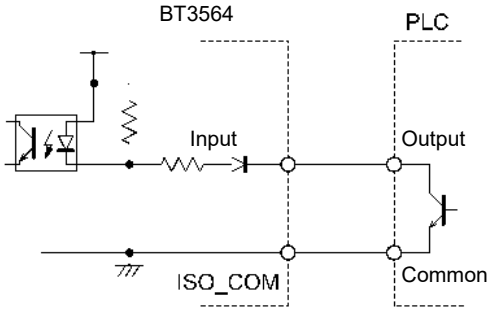

PLC Output (Sink Output) Connections

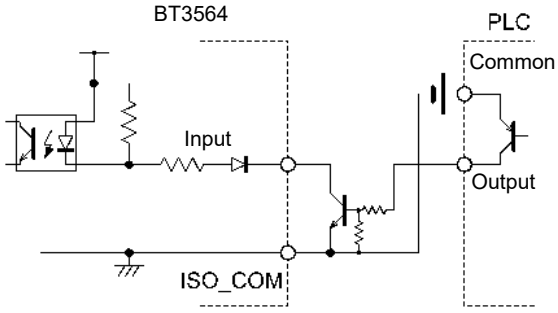

PLC Output (Source Output) Connections

Output Circuit Connection Examples

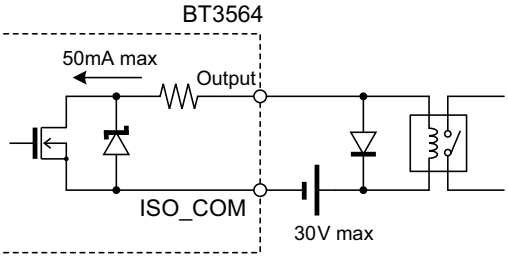

Relay Connections

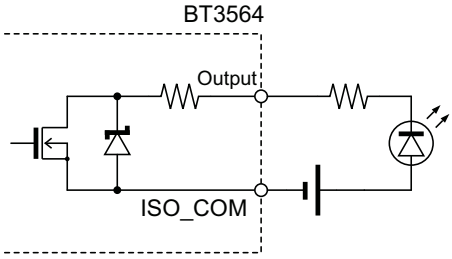

LED Connection

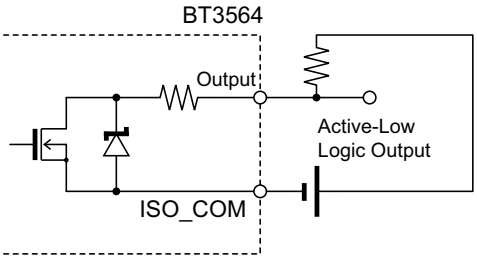

Active-Low Logic Output

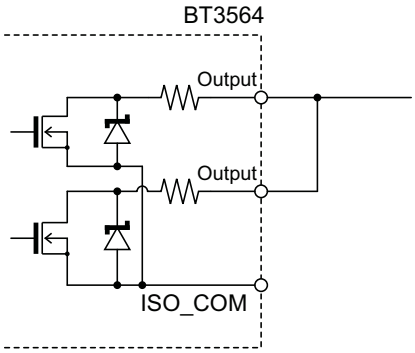

Wired OR

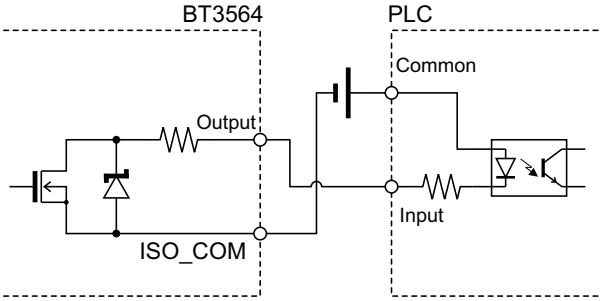

PLC Input (Source Input) Connections

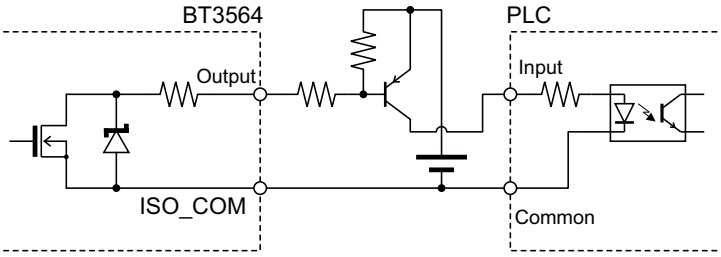

PLC Input (Sink Input) Connections

5.5 External Control Q&A

Common Questions	Answers
How do I connect external trigger input?	Short-circuit the the $\overline{\text{TRIG}}$ pin and the ISO_CO pin with a switch or open collector output.
Which pins are common ground for input and output signals?	The ISO_COM pins.
Are the common (signal ground) pins shared by both inputs and outputs?	Both common ground pins can be shared by inputs and outputs.
How do I confirm output signals?	Confirm voltage waveforms with an oscilloscope. To do this, the output pins such as $\overline{\text{EOM}}$ and comparator decision outputs need to be pulled up (through several kΩ).
How do I troubleshoot input (control) signal issues?	For example, if triggering does not operate properly, bypass the PLC and short-circuit the $\overline{\text{TRIG}}$ pin directly to an ISO_COM pin. Be careful to avoid power shorts.
Are the comparator decision signals ($\overline{\text{HI}}$, $\overline{\text{IN}}$, $\overline{\text{LO}}$) retained duri150 ng measurement (or can they be off)?	The state is determined at the end of measurement, and is off once at the start of measurement.
Why would the $\overline{\text{EOM}}$ signal not be detected?	Try using the Pulse setting for EOM output. When the measurement time is short and EOM output is set to Hold, the time to de-assert may be too short to be detected by the PLC. When the EOM output is set to Pulse, the signal is asserted (ON) for the specified pulse width before turning off.
What situations cause measurement faults to occur?	An error is displayed in the following cases: • A probe is not connected • A contact is unstable • A probe or measurement object is dirty or corroded • Measurement object resistance is much higher than the measurement range
Is a connector or flat cable for connection provided?	A solder-type connector is supplied. The cable must be prepared at the user's side.
Is direct connection to a PLC possible?	Direct connection is supported for relay or open-collector outputs and positive-ground optocoupler inputs. (Before connecting, confirm that voltage and current ratings will not be exceeded.)
Can external I/O be used at the same time as RS-232C or other communications?	After setting up communications, it is possible to control measurement with the $\overline{\text{TRIG}}$ signal while acquiring measurement data via a communications interface.
How should external power be connected?	The instrument's external I/O input and output signals all operate from an internal isolated power source, so power must not be supplied from the PLC side.
Can the measured values be acquired using a footswitch during the free-run operation?	Please use the free software for acquiring measured values available for download from our website.

Printing Chapter 6

6.1 Connecting the Printer

Before connecting the printer

⚠WARNING

Because electric shock and instrument damage hazards are present, always follow the steps below when connecting the printer.

- Always turn off the instrument and the printer before connecting.
- A serious hazard can occur if a wire becomes dislocated and contacts another conductor during operation. Make certain connections are secure.

NOTE

- As much as possible, avoid printing in hot and humid environments. Otherwise, printer life may be severely shortened.
- Use only compatible recording paper in the printer. Using non-specified paper may not only result in faulty printing, but printing may become impossible.
- If the recording paper is skewed on the roller, paper jams may result.

Recommended printer

The requirements for a printer to be connected to the instrument are as follows. Confirm compatibility and make the appropriate settings on the printer before connecting it to the instrument.

- Interface RS-232C
- Characters per line..... At least 45
- Communication speed ..... 9600 bps
- Data bits..... 8
- Parity..... none
- Stop bits 1
- Flow control..... none
- Control codes ..... Capable of directly printing plain text

NOTE

The optional printer model 9670 is no longer available. Their model 9670 printers can still use.

Connecting the PRINTER to the Instrument

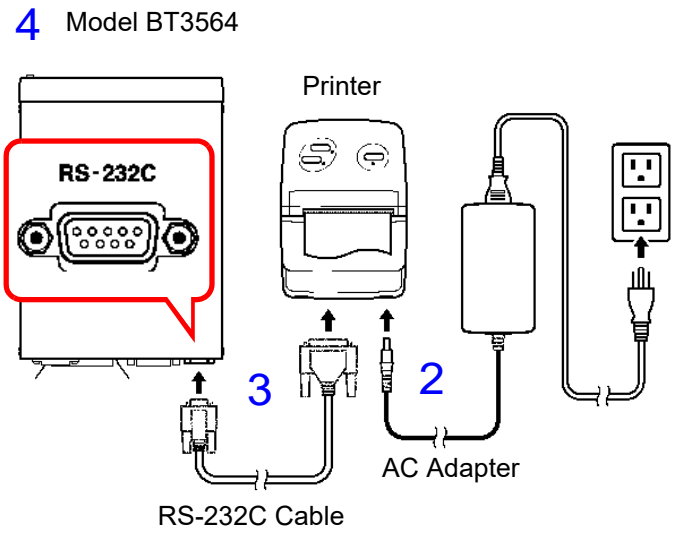

1. Confirm that the instrument and Printer are turned off.
2. Connect the AC Adapter to the printer, and insert the power plug into an outlet.
3. Connect the RS-232C Cable to the RS-232C connectors on the instrument and printer.
4. Turn the instrument and printer on.

Connector Pinouts

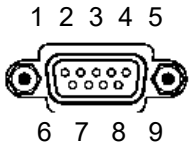

Model BT3564 (9-pin) Connector

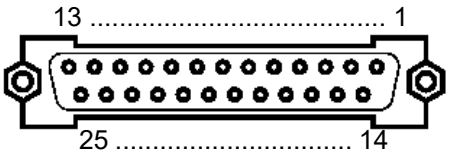

Printer (25-pin) Connector (Example)

Function	Signal Name	Pin
Receive Data	RxD	2
Transmit Data	TxD	3
Signal or Common Ground	GND	5

Pin	Signal Name	Function
2	TxD	Transmit Data
3	RxD	Receive Data
7	GND	Signal or Common Ground
4	RTS	Request to Send
5	CTS	Clear to Send

6.2 Selecting the Interface

1

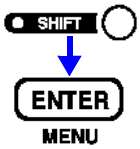

(The SHIFT indicator lights up.)

The Menu display appears.

2

Select the Interface Selection display.

See "1.4 Menu Display Sequence (SHIFT > ENTER)" (⇒ p.13).

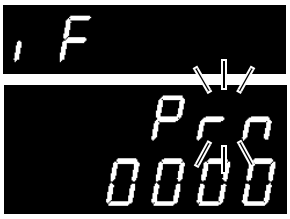

(Main display)

(Sub display)
The current setting blinks.

Select the printer on the sub display.

rS..... RS-232C
GP-Ib ..... GP-IB
Prn ..... Printer

3

Or
numeric keypads

Set the print interval time.

0000 .....Interval printing is off. (Printing is carried out once when **PRINT** key is pressed.)
0001 to 3600 .....Sets the print interval time in seconds.

4

Applies the setting and returns to the Measurement display.

6.3 Printing

Printing Measured Values and Decision Results

On the Measurement display, press the **PRINT** key or short-circuit the $\overline{\text{PRINT}}$ pin to the ISO_COM of the EXT I/O connector to print the measured value and decision result.

NOTE

- When using the external trigger, if you want to print after a triggered measurement finishes, connect the $\overline{\text{EOM}}$ signal of the EXT I/O to the $\overline{\text{PRINT}}$ signal.
- To print all measurements continuously, connect the $\overline{\text{EOM}}$ signal to the $\overline{\text{PRINT}}$ signal and enable the internal trigger.
- When the statistical calculation function is on and the internal trigger is selected, the **TRIG** key or $\overline{\text{TRIG}}$ signal will trigger statistical calculation and printing of the current measurement value.
- Valid counts are 1 to 30000. Above 30000, the count returns to 1.

Interval Printing

This function allows you to automatically print out measurement results at preset intervals. The print interval time must be set from the Interface Selection display.
See "6.2 Selecting the Interface" (⇒ p.89).
The setting range is 1 to 3600 seconds.
When the print interval time is set to "0", interval printing is disabled, and only normal printing is carried out.

Operation when interval printing is selected:

1. Start printing by pressing the **PRINT** key or sending the $\overline{\text{PRINT}}$ signal via EXT I/O.
2. Elapsed time (hours/minutes/seconds) and measurement values are printed automatically at intervals corresponding to the preset interval time.
3. Stop printing by pressing the **PRINT** key or sending the $\overline{\text{PRINT}}$ signal via EXT I/O again.

NOTE

- When the printed elapsed time reaches 100 hours, it resets to 00:00:00 and continues from zero.
  (Example)
  After 99 hours, 59 minutes and 50 seconds: 99:59:50
  After 100 hours, 2 minutes and 30 seconds: 00:02:30
- Selecting a display other than the measurement display causes interval printing to stop.

Printing Statistical Calculation Results

From the Statistical Calculation display, press the **PRINT** key to print statistical calculation results. If no valid data exists, only the data count is printed. When only one valid data sample exists, standard deviation of sample and process capability indices cannot be printed.

Example Printouts

Measurement values (ΩV mode)

```
 1   2.5375mOhm, 4.70056 V
 2 - 0.9730mOhm, 4.70055 V
 3   15.142mOhm,-0.00002 V
 4   160.68mOhm, 267.031 V
 5  15.039 Ohm,- 50.2540 V
 6   200.12 Ohm, 11.3176 V
 7   2.9984kOhm,-11.3099 V
 8   0.1615 Ohm,-4.70054 V
 9    0.166 Ohm,- 4.7006 V
10     0.16 Ohm,-  4.700 V
```

Measurement values (Ω mode)

```
43   17.855mOhm
44    0.641 Ohm
45   1.9984kOhm
```

Measurement values (V mode)

```
100  3.70079 V
101 -58.3306 V
102  203.086 V
```

With the Comparator ON

```
 50    5.033 Ohm Hi, 1.60427 V   IN
 51    5.033 Ohm Hi,-0.00001 V   Lo
 52   17.855mOhm IN
 53   18.354mOhm Hi
 54   15.322mOhm Lo
 55  4.70072 V   IN
 56 -4.70070 V   Lo
```

With comparator reference percentages

```
3120   28.653 %   Hi,   0.111 %   Hi
3121 -  0.192 %   Lo,-  0.001 %   IN
3122    O.F.      Hi,   0.317 %   Hi
```

With erroneous measurement values

```
90    O.F.     ,-4.70053 V
91   1.0647 Ohm,   O.F.
92    O.F.     ,   O.F.
93 -  O.F.     , 4.70051 V
94 --------    ,--------
95  Invalid    , Invalid
```

Statistical Calculations (Comparator ON)

```
*** RESISTANCE ***
Number        85
Valid         85
Average    13.06mOhm
Max        13.78mOhm(    74)
Min        12.10mOhm(     3)
Sn          0.38mOhm
Sn-1        0.38mOhm
Cp          1.32
CpK         0.09
Comp Hi       40
Comp IN       45
Comp Lo        0
```

Max/Min count

```
***  VOLTAGE   ***
Number        85
Valid         85
Average  10.0074 V
Max      10.0197 V  (    57)
Min       9.9938 V  (    31)
Sn        0.0068 V
Sn-1      0.0068 V
Cp          0.35
CpK         0.32
Comp Hi       10
Comp IN       59
Comp Lo       16
```

Interval print

```
00:00:00   16.020mOhm, 3.70052 V
00:00:01   16.015mOhm, 3.70052 V
00:00:02   16.010mOhm, 3.70052 V
00:00:03   16.006mOhm, 3.70051 V
00:00:04   16.002mOhm, 3.70052 V
00:00:05   15.999mOhm, 3.70051 V
00:00:06   15.998mOhm, 3.70051 V
```

NOTE

Measurement values indicated as "Invalid" cannot be displayed by the instrument.
The number of statistical calculation results indicated as “Valid” equals the count of valid data excluding measurement faults and overflows.

Analog Output Chapter 7

The Model BT3564 is capable of generating analog output for measured resistance values. Changes in resistance values can be recorded by connecting the instrument's analog output to a logger or similar device.

⚠WARNING To avoid electrical shock and instrument damage, turn the instrument and connected equipment off and/or disconnect the probes from the test object before connecting the analog output terminals.

⚠CAUTION To avoid damaging the instrument, do not short the output terminals or input voltage to them.

7.1 Connecting Analog Output

This section descries how to connect cables to the analog output terminals on the instrument's rear panel.

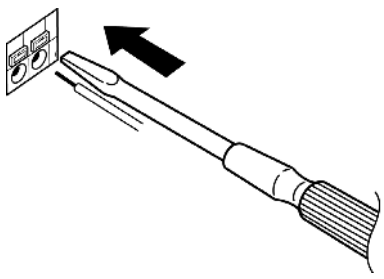

1. Push down on the button with a flat-head screwdriver or similar tool.
2. Insert the wire into the connection port while holding the button down.
3. Release the button to lock the wire in place. A similar procedure can be used to remove the lead.

Recommended wire type	: AWG16 (1.2 mm diameter) solid conductor, AWG16 (1.25 mm^2) stranded conductor
Compatible wire types	: AWG26 (0.4 mm diameter) to AWG16 (1.2 mm diameter) solid conductor, AWG24 (0.2 mm^2) to AWG16 (1.25 mm^2) stranded conductor
Standard bare wire length	: 11 mm

7.2 Analog Output Specifications

Output voltage	0 V to 3.1 V DC (f.s.)
Resolution	12-bit resolution (approx. 1 mV)
Output resistance	1 kΩ
Output	Measured resistance value (display count value) Fixed at 3.1 V at OF or measurement fault. Fixed at 0 V for negative values.
Output rate	0 counts to 31000 counts → 0 V to 3.1 V
Output accuracy	Resistance measurement accuracy ±0.2% f.s. (temperature coefficient ±0.02% f.s./°C)
Response time	Resistance measurement response time + sampling time + 1 ms

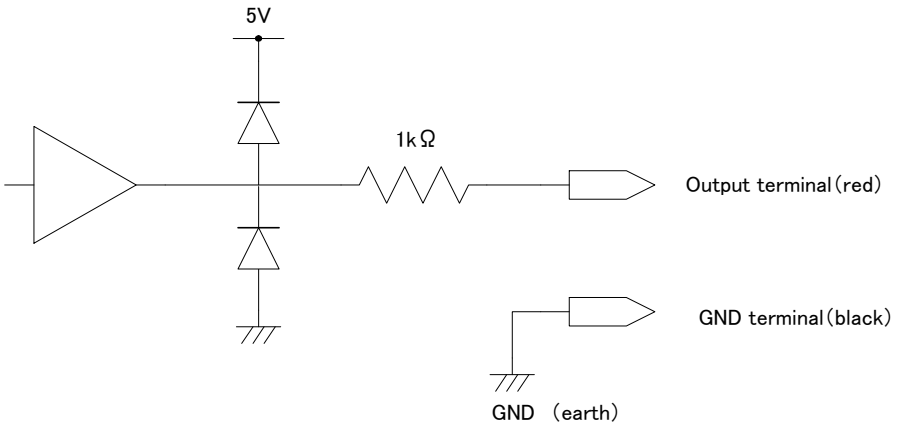

NOTE

- The instrument has an output resistance of 1 kΩ. Connected devices must have an input resistance of at least 10 MΩ. (The output voltage is divided by the output resistance and input resistance, resulting in a reduction of 0.1% for 1 MΩ.)
- Connecting a cable may result in external noise. Implement a bandpass filter or other measures as needed in the connected device.
- The analog output's GND pin is grounded (to the metallic part of the case).
- The output voltage is updated at the resistance measurement sampling timing.
- Recorded waveforms are stepped (since the output circuit response is extremely fast compared to the update period).
- When using auto-ranging, the same resistance value may result in 1/10 (or 10 times) the output voltage due to range switching. It is recommend to set the range manually.
- Output is set to 0 V when changing settings (range switching, etc.) and when the instrument is turned off.

RS-232C/GP-IB Interfaces

Chapter 8

This chapter describes the GP-IB and RS-232C interfaces, using the following symbols to indicate which information pertains to each interface. Sections with neither of these symbols pertain to both interfaces.

GP-IB : GP-IB only

RS-232C : RS-232C only

Before Use

- Always make use of the connector screws to affix the GP-IB or RS-232C connectors.
- When issuing commands that contain data, make certain that the data is provided in the specified format.

⚠CAUTION

- Use a common ground for both the instrument and the computer. Using different ground circuits will result in a potential difference between the instrument's ground and the computer's ground. If the communications cable is connected while such a potential difference exists, it may result in equipment malfunction or failure.
- Before connecting or disconnecting any the communications cable, always turn off the instrument and the computer. Failure to do so could result in equipment malfunction or damage.
- After connecting the communications cable, tighten the screws on the connector securely. Failure to secure the connector could result in equipment malfunction or damage.

8.1 Overview and Features

All instrument functions other than power on/off switching can be controlled via GP-IB/RS-232C interfaces.

- Resetting is supported.

GP-IB

- IEEE 488.2-1987 Common (essential) Commands are supported.
- Complies with the following standard:
  Applicable standard IEEE 488.1-1987*1
- This instrument is designed with reference to the following standard:
  Reference standard IEEE 488.2-1987*2
- If the output queue becomes full, a query error is generated and the output queue is cleared. Therefore, clearing the output queue and query error output from the deadlocked condition*3 as defined in IEEE 488.2 is not supported.

*1. ANSI/IEEE Standard 488.1-1987, IEEE Standard Digital Interface for Programmable Instrumentation.

*2. ANSI/IEEE Standard 488.2-1987, IEEE Standard Codes, Formats, Protocols, and Common Commands.

*3. The situation in which the input buffer and the output queue become full, so that processing cannot continue.

8.2 Specifications

RS-232C Specifications

RS-232C

Transfer method	Communications : Full duplex Synchronization : Start-stop synchronization
Baud rate	9600 bps/ 19200 bps/ 38400 bps
Data length	8 bits
Parity	none
Stop bit	1 bit
Message terminator (delimiter)	Receiving : CR+LF, CR Transmitting : CR+LF
Flow control	none
Electrical specification	Input voltage levels 5 to 15 V: ON, -15 to -5 V: OFF Output voltage levels 5 to 9 V: ON, -9 to -5 V: OFF
Connector	RS-232C Interface Connector Pinout (Male 9-pin D-sub, with #4-40 attachment screws) The I/O connector is a DTE (Data Terminal Equipment) configuration Recommended cables: • Model 9637 RS-232C Cable (for PC/AT-compatibles) • Model 9638 RS-232C Cable (for PC98-series) See " Attaching the Connector" (⇒ p.98).

GP-IB Specifications

GP-IB

Interface Functions

SH1	All Source Handshake functions are supported.
AH1	All Acceptor Handshake functions are supported.
T6	Basic talker functions are supported. Serial poll function are supported. No talk-only mode. The talker cancel function with MLA (My Listen Address) is supported.
L4	Basic listener functions are supported. No listen-only mode. The listener cancel function with MTA (My Talk Address) is supported.
SR1	All Service Request functions are supported.
RL1	All Remote/Local functions are supported.
PP0	No Parallel Poll function.
DC1	All Device Clear functions are supported.
DT1	All Device Trigger functions are supported.
C0	No Controller functions are supported.

Operating Code: ASCII codes

8.3 Selecting the Connections and Protocol

Attaching the Connector

⚠WARNING

- Always turn both devices off when connecting and disconnecting an interface connector. Otherwise, an electric shock accident may occur.
- After connecting, always tighten the connector screws. The mounting screws must be firmly tightened or the RS-232C connector may not perform to specifications, or may even fail.
- To avoid damage to the instrument, do not short-circuit the connector and do not input voltage to the connector.

RS-232C

RS-232C Connector

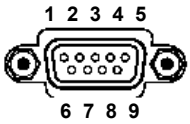

Male 9-pin D-sub
#4-40 attaching screws

Connect the RS-232C cable.

To connect the instrument to a controller (DTE), use a crossover cable compatible with the connectors on both the instrument and the controller.

The I/O connector is a DTE (Data Terminal Equipment) configuration.
This instrument uses only pins 2, 3 and 5. The other pins are unconnected.

Pin No.	Signal Name			Signal	Notes
	Common	EIA	JIS		
1	DCD	CF	CD	Unused	No connection
2	RxD	BB	RD	Receive Data	
3	TxD	BA	SD	Transmit Data	
4	DTR	CD	ER	Data Terminal Ready	Internally connected to +5 V
5	GND	AB	SG	Signal Ground	
6	DSR	CC	DR	Unused	No connection
7	RTS	CA	RS	Request to Send	Internally connected to +5 V
8	CTS	CB	CS	Unused	No connection
9	RI	CE	CI	Unused	No connection

RS-232C

When connecting the instrument to a PC

Use a **crossover cable** with **female 9-pin D-sub** connectors.

Crossover Wiring

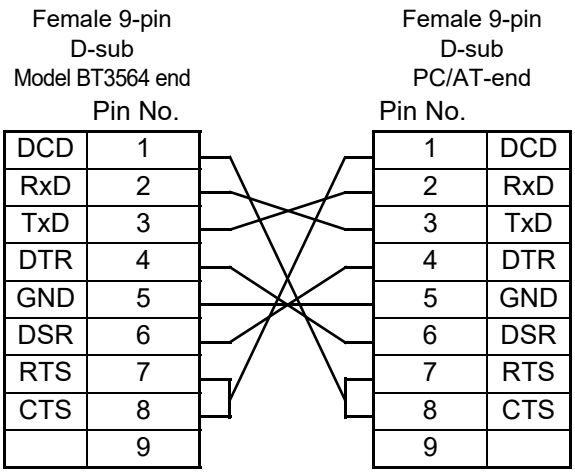

Recommended cable:

Hioki
Model 9637 RS-232C Cable (1.8 m)

When connecting to a instrument with a female 9-pin D-sub connector

Use a **crossover cable** with **a female 9-pin D-sub** and **a male 25-pin D-sub** connector.
As the figure shows, RTS and CTS pins are shorted together and crossed to DCD in the other connector.

Crossover Wiring

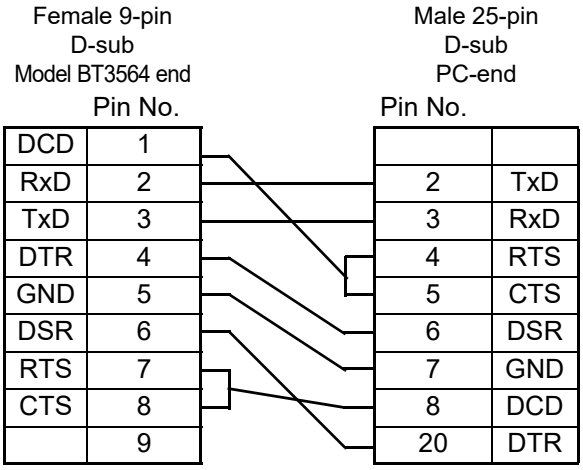

Recommended cable:

Hioki
Model 9638 RS-232C Cable (1.8 m)

Note that the combination of a dual male 25-pin D-sub cable and a 9- to 25-pin conversion adapter cannot be used.

GP-IB

GP-IB Connector

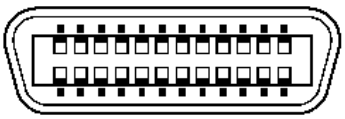

Connecting a GP-IB cable.

Recommended cable:
Model 9151-02 GP-IB Connector Cable (2 m)

Selecting the Communication Conditions

1 SHIFT → ENTER (MENU)

(The SHIFT indicator lights up.)

The Menu display appears.

2

Select the Interface Selection display.
See "1.4 Menu Display Sequence (SHIFT > ENTER)" (⇒ p.13).

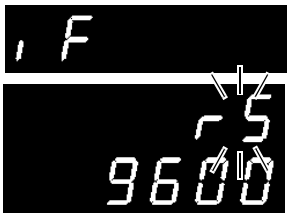

(Main display)

(Sub display)
The current setting blinks.

3

Select RS-232C or GP-IB on the sub display.
rS RS-232C
GP-Ib ..... GP-IB
Prn ..... Printer

When you select RS-232C, set the communications speed.

(Sub display)

When selecting **GP-IB**, also set the Address and Message Terminator.

(Sub display)

Message Terminator setting (LF/CRLF)

Address setting (0 to 30)

Selects the item to set Setting

4 ENTER

Applies the settings and returns to the Measurement display.

8.4 Communication Methods

Various messages are supported for controlling the instrument through the interfaces.
Messages can be either program messages, sent from the PC to the instrument, or response messages, sent from the instrument to the PC.

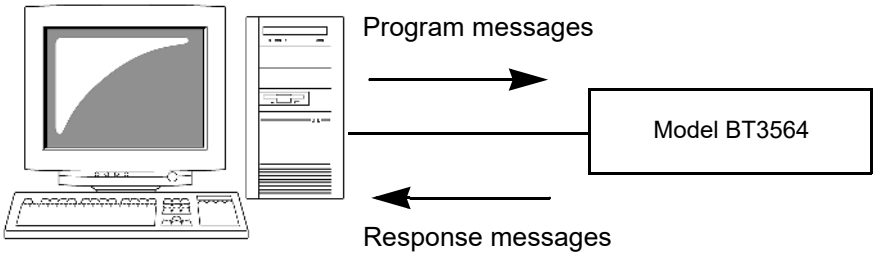

Message types are further categorized as follows:

- Messages
  - Program messages
    - Command message
    - Query message
  - Response messages

Message Format

Program Messages

Program messages can be either Command messages or Query messages.

- Command messages
  Instructions to control the instrument, such as to change settings or reset

  Example: (instruction to set the measurement range)

  ```
  :RESISTANCE:RANGE 100E-3
  ```

  Header portion — Space — Data portion

- Query messages
  Requests for responses relating to results of operation or measurement, or the state of instrument settings.

  Example: (request for the current measurement range)

  ```
  :RESISTANCE:RANGE?
  ```

  Header portion — Question mark

See For details: See Section "Headers" (⇒ p.102), "Separators" (⇒ p.103) and "Data Formats" (⇒ p.104).

Response Messages

When a query message is received, its syntax is checked and a response message is generated.
The **:SYSTem:HEADer** command determines whether headers are prefixed to response messages.

Header ON **:RESISTANCE:RANGE 300.00E-3**
Header OFF **300.00E-3**
(the current resistance measurement range is 300 mΩ)

At power-on, Header off is selected.
If an error occurs when a query message is received, no response message is generated for that query.
No header is applied to commands used only for queries, such as **:FETCh?**, **:MEASure** and **:CALCulate:LIMit:RESistance:RESult?**.

Command Syntax

Command names are chosen to mnemonically represent their function, and can be abbreviated. The full command name is called the "long form", and the abbreviated name is called the "short form".
The command references in this manual indicate the short form in upper-case letters, extended to the long form in lower case letters, although the commands are not case-sensitive in actual usage.
Response messages generated by the instrument are in long form and in upper

FUNCTION	OK (long form)
FUNC	OK (short form)
FUNCT	Error
FUN	Error

case letters.

Headers

Headers must always be prefixed to program messages.

(1) Command Program Headers

There are three types of commands: Simple, Compound and Standard.

- Headers for Simple Commands
  This header type is a sequence of letters and digits

  ***ESE 0**
- Headers for Compound Commands
  These headers consist of multiple simple command type headers separated by colons ":"

  :SAMPle:RATE
- Headers for Standard Commands
  This header type begins with an asterisk "*****",
  indicating that it is a standard command defined by IEEE 488.2.

  ***RST**

(2) Query Program Header

These commands are used to interrogate the instrument about the results of operations, measured values and the current states of instrument settings.
As shown by the following examples, a query is formed by appending a question mark "**?**" after a program header.

:FETCh?
:MEASure:RESistance?

Message Terminators

This instrument recognizes the following message terminators:

GP-IB

- LF
- CR+LF
- EOI
- LF with EOI

RS-232C

- CR
- CR+LF

From the instrument's interface settings, the following can be selected as the terminator for response messages.

GP-IB

- LF with EOI (initial setting)
- LF with CR and EOI

RS-232C

- CR + LF

See " Selecting the Communication Conditions" (⇒ p.100).

Separators

(1) Message Unit Separator

Multiple message can be written in one line by separating them with semicolons ";".

```
:SYSTEM:LFREQUENCY 60;*IDN?
```

- When messages are combined in this way and if one command contains an error, all subsequent messages up to the next terminator will be ignored.
- A query error occurs if a query command is combined with an immediately following semicolon and subsequent command.

(2) Header Separator

In a message consisting of both a header and data, the header is separated from the data by a space " ".

```
:SYSTEM:ELOCK ON
```

(3) Data Separator

In a message containing multiple data items, commas are required to separate the data items from one another.

Data Formats

The instrument uses character data and decimal numeric data, depending on the command.

(1) Character Data

Character data always begins with an alphabetic character, and subsequent characters may be either alphabetic or numeric. Character data is not case-sensitive, although response messages from the instrument are only upper case.
As with command syntax, both long and short forms are acceptable.

```
:SYSTEM:ELOCK ON
```

(2) Decimal Numeric Data

Three formats are used for numeric data, identified as NR1, NR2 and NR3. Numeric values may be signed or unsigned. Unsigned numeric values are handled as positive values.
Values exceeding the precision handled by the instrument are rounded to the nearest valid digit.

- NR1 Integer data (e.g.: +12, -23, 34)
- NR2 Fixed-point data(e.g.: +1.23, -23.45, 3.456)
- NR3 Floating-point exponential representation data
  (e.g.: +1.0E-2, -2.3E+4)

The term "NRf format" includes all three of the above numeric decimal formats.
The instrument accepts NRf format data.

The format of response data is specified for each command, and the data is sent in that format.

```
:ESR0 106
:FETCH? +106.57E-3
```

GP-IB

The instrument does not fully support IEEE 488.2. As much as possible, please use the data formats shown in the Reference section.
Also, be careful to avoid constructing single commands that could overflow the input buffer or output queue.

Compound Command Header Omission

When several commands having a common header are combined to form a compound command (e.g., `:CALCulate: LIMit:RESistance:UPPer:` and `:CALCulate:LIMit:RESistance:LOWer`), if they are written together in sequence, the common portion (for this example, `:CALCulate: LIMit:RESistance`) can be omitted after its initial occurrence.
This common portion is called the "current path" (analogous to the path concept in computer file storage), and until it is cleared, the interpretation of subsequent commands presumes that they share the same common portion.

This usage of the current path is shown in the following example:

Full expression

```
:CALCulate:LIMit:RESistance:UPPer 30000;:CALCulate:LIMit:LOWer 29000
```

Compacted expression

```
:CALCulate:LIMit:RESistance:UPPer 30000;LOWer 29000
```

This portion becomes the current path, and can be omitted from the messages immediately following.

The current path is cleared when the power is turned on, when reset by key input, by a colon "`:`" at the start of a command, and when a message terminator is detected.
Standard command messages can be executed regardless of the current path. They have no effect upon the current path.

A colon "`:`" is not required at the start of the header of a Simple or Compound command. However, to avoid confusion with abbreviated forms and operating mistakes, we recommend always placing a colon at the start of a header.

Output Queue and Input Buffer

Output Queue

Response messages are stored in the output queue until read by the controller. The output queue is also cleared in the following circumstances:

- Power on
- Device clear
- Query Error

The output queue capacity of the instrument is 64 bytes. If response messages overflow the buffer, a query error is generated and the output queue is cleared. Also, with GP-IB, if a new message is received while data remains in the output queue, the output queue is cleared and a query error is generated.

Input Buffer

The input buffer capacity of the instrument is 256 bytes.
If 256 bytes are allowed to accumulate in this buffer so that it becomes full, the GP-IB interface bus enters the waiting state until space is cleared in the buffer. The RS-232C interface will not accept data beyond 256 bytes.

NOTE Ensure that the no command ever exceeds 256 bytes.

Status Byte Register

The instrument implements the status model defined by IEEE 488.2 with regard to the serial poll function using the service request line.
The term "event" refers to any occurrence that generates a service request.

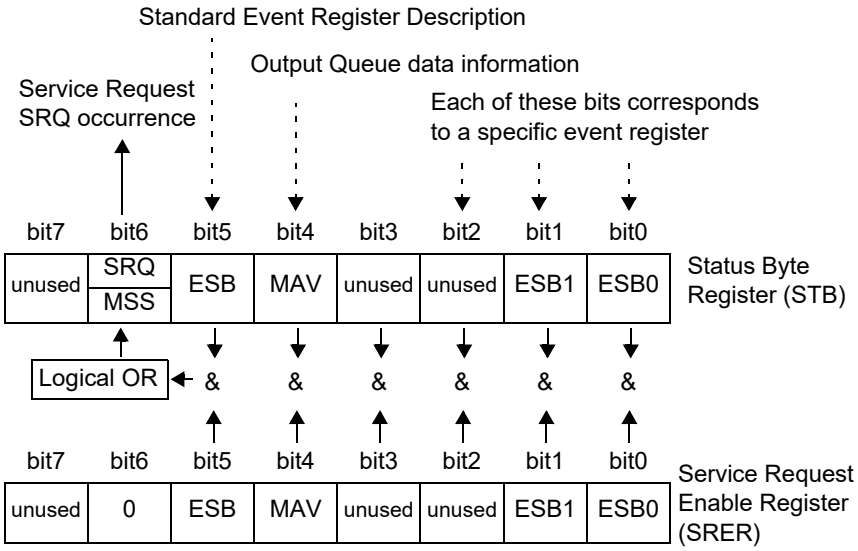

Overview of Service Request Occurrence

The Status Byte Register contains information about the event registers and the output queue. Required items are selected from this information by masking with the Service Request Enable Register. When any bit selected by the mask is set, bit 6 (MSS; the Master Summary Status) of the Status Byte Register is also set, which generates an SRQ (Service Request) message and dispatches a service request.

Status Byte Register (STB)

During serial polling, the contents of the 8-bit Status Byte Register are sent from the instrument to the controller.
When any Status Byte Register bit enabled by the Service Request Enable Register has switched from 0 to 1, the MSS bit becomes 1. Consequently, the SRQ bit is set to 1, and a service request is dispatched.

The SRQ bit is always synchronous with service requests, and is read and simultaneously cleared during serial polling. Although the MSS bit is only read by an ***STB?** query, it is not cleared until a clear event is initiated by the ***CLS** command.

Bit 7	unused
Bit 6 SRQ MSS	Set to 1 when a service request is dispatched. This is the logical sum of the other bits of the Status Byte Register.
Bit 5 ESB	Standard Event Status (logical OR) bit This is logical sum of the Standard Event Status Register.
Bit 4 MAV	Message available Indicates that a message is present in the output queue.
Bit 3	unused
Bit 2	unused
Bit 1 ESB1	Event Status (logical OR) bit 1 This is the logical sum of Event Status Register 1.
Bit 0 ESB0	Event Status (logical OR) bit 0 This is the logical sum of Event Status Register 0.

Service Request Enable Register (SRER)

This register masks the Status Byte Register. Setting a bit of this register to 1 enables the corresponding bit of the Status Byte Register to be used.

Event Registers

Standard Event Status Register (SESR)

The Standard Event Status Register is an 8-bit register.
If any bit in the Standard Event Status Register is set to 1 (after masking by the Standard Event Status Enable Register), bit 5 (ESB) of the Status Byte Register is set to 1.

The Standard Event Status Register is cleared in the following situations:

- When a ***CLS** command is executed
- When an event register query (***ESR?**) is executed
- When the instrument is powered on

Bit 7	PON	Power-On Flag Set to 1 when the power is turned on, or upon recovery from an outage.
Bit 6		User Request unused
Bit 5	CME	Command Error (The command to the message terminator is ignored.) This bit is set to 1 when a received command contains a syntactic or semantic error: • Program header error • Incorrect number of data parameters • Invalid parameter format • Received a command not supported by the instrument
Bit 4	EXE	Execution Error This bit is set to 1 when a received command cannot be executed for some reason. • The specified data value is outside of the set range • The specified setting data cannot be set • Execution is prevented by some other operation being performed
Bit 3	DDE	Device-Dependent Error This bit is set to 1 when a command cannot be executed due to some reason other than a command error, a query error or an execution error. • Execution is impossible due to an internal instrument fault
Bit 2	QYE	Query Error (the output queue is cleared) This bit is set to 1 when a query error is detected by the output queue control. • When an attempt has been made to read an empty output queue (GP-IB only) • When the data overflows the output queue • When data in the output queue has been lost
Bit 1		unused
Bit 0	OPC	Operation Complete (GP-IB only) • This bit is set to 1 in response to an ***OPC** command. • It indicates the completion of operations of all messages up to the ***OPC** command

Standard Event Status Enable Register (SESER)

Setting any bit of the Standard Event Status Enable Register to 1 enables access to the corresponding bit of the Standard Event Status Register.

Standard Event Status Register (SESR) and Standard Event Status Enable Register (SESER)

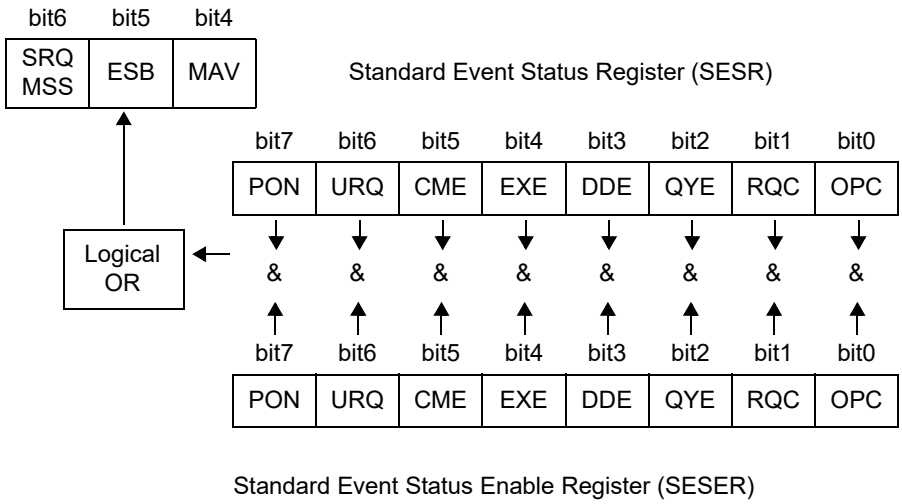

Device-Specific Event Status Registers (ESR0 and ESR1)

The instrument provides two event status registers for controlling events.
Each event register is an 8-bit register.

When any bit in one of these event status registers enabled by its corresponding event status enable register is set to 1, the following happens:

- For Event Status Register 0, bit 0 (ESB0) of the Status Byte Register is set to 1.
- For Event Status Register 1, bit 1 (ESB1) of the Status Byte Register is set to 1.

Event Status Registers 0 and 1 are cleared in the following situations:

- When a ***CLS** command is executed
- When an Event Status Register query (**:ESR0?** or **:ESR1?**) is executed
- When the instrument is powered on

	Event Status Register 0 (ESR0)		Event Status Register 1 (ESR1)	
Bit 7	--	Unused	--	unused
Bit 6	--	Unused	AND	AND
Bit 5	ERR	Measurement Faults	V-Hi	Voltage High Comparator Result
Bit 4	--	Unused	V-IN	Voltage IN Comparator Result
Bit 3	--	Unused	V-Lo	Voltage Low Comparator Result
Bit 2	--	Unused	R-Hi	Resistance High Comparator Result
Bit 1	INDEX	End of Measurement	R-IN	Resistance IN Comparator Result
Bit 0	EOM	End of Conversion	R-Lo	Resistance Low Comparator Result

Event Status Registers 0 (ESR0) and 1 (ESR1), and Event Status Enable Registers 0 (ESER0) and 1 (ESER1)

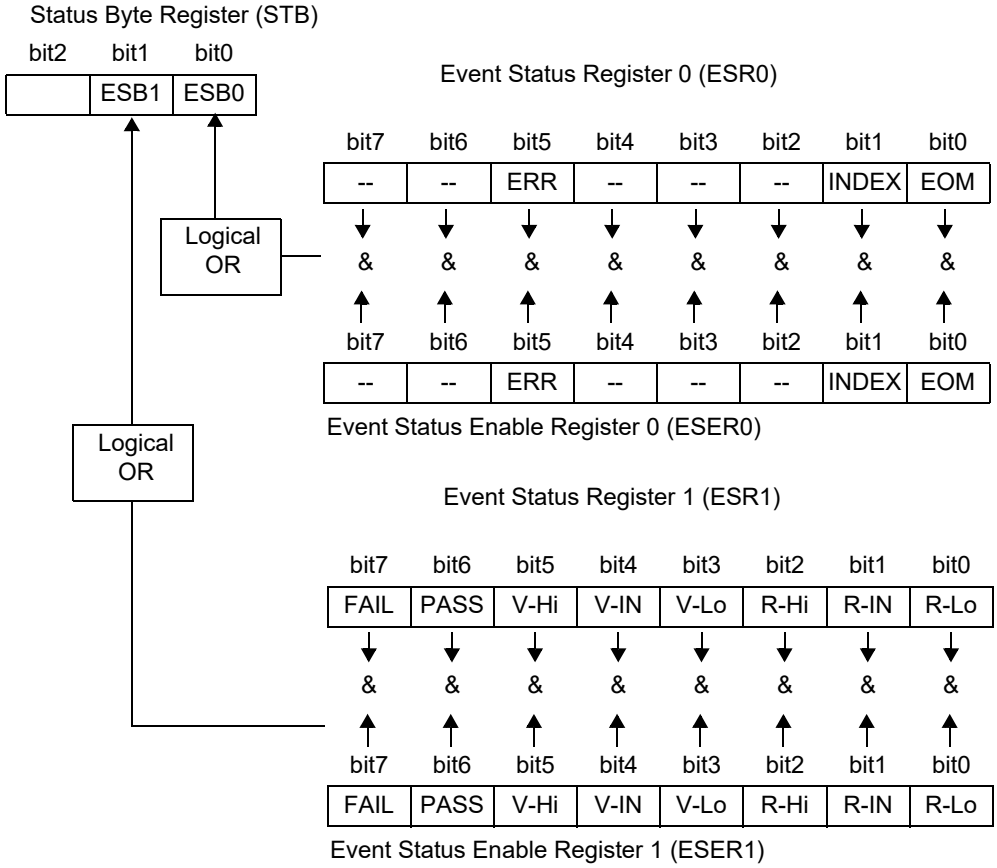

Register Reading and Writing

Register	Read	Write
Status Byte Register	∗STB?	–
Service Request Enable Register	∗SRE?	∗SRE
Standard Event Status Register	∗ESR?	–
Standard Event Status Enable Register	∗ESE?	∗ESE
Event Status Register 0	:ESR0?	–
Event Status Enable Register 0	:ESE0?	:ESE0
Event Status Register 1	:ESR1?	–
Event Status Enable Register 1	:ESE1?	:ESE1

GP-IB Commands

The following commands can be used for performing interface functions.

Command	Description	
GTL	Go To Local	Cancels the Remote state and enters the Local state.
LLO	Local Lock Out	Disables all keys, including the **LOCAL** key.
DCL	Device CLear	Clears the input buffer and the output queue.
SDC	Selected Device Clear	Clears the input buffer and the output queue.
GET	Group Execute Trigger	When an external trigger occurs, processes one sample.

Initialization Items

✓ : initialized, — : not initialized

Initialization Method / Item	At Power-on	*RST Command	Device Clear	*CLS Command
Device-specific functions (Range, etc.)	—	✓	—	—
Output Queue	✓	—	✓	—
Input buffer	✓	—	✓	—
Status Byte Register	✓	—	—*1	✓*2
Event registers	✓*3	—	—	✓
Enable register	✓	—	—	—
Current path	✓	—	✓	—
Headers on/off	✓	✓	—	—

*1: Only the MAV bit (bit 4) is cleared.
*2: All bits except the MAV bit are cleared.
*3: Except the PON bit (bit 7).

Local Function

During communications, **REMOTE** is lit to indicate the remote control state.

To cancel the Remote state

LOCAL REMOTE off

NOTE

- Remote control can be canceled by pressing the **SHIFT** key and then the **AUTO** key.
- If the Local Lock Out (⇒ p.110) GP-IB command has been issued, the Remote state cannot be canceled.

8.5 Message List

Commands specific to RS-232C or GP-IB are identified by RS-232C or GP-IB, respectively.

NOTE

- Any spelling mistake in a message results in a command error.
- < >: contents of the data portion.
  [Numeric data values are indicated by format as (NR1), (NR2) and (NR3), representing integer, fixed-point and floating point decimal data values respectively, or as (NRf), representing any of these formats]
- [ ]: optional

Standard Commands

Command	Data Formats (Response data if a Query)	Description	Error	Ref page
∗IDN?	<Manufacturer's name>, <Model name>,0, <Software version>	Queries the device ID	*2	119
∗RST		Initializes the device	*1	119
∗TST?	0 to 3 (NR1)	Initiates a self-test and queries the result	*2	119
∗OPC		Requests an SRQ after execution completion	*1	120
∗OPC?	1	Queries execution completion	*2	120
∗WAI		Waits for operations to finish	*1	120
∗CLS		Clears the Event Registers and the Status Byte Register	*1	120
∗ESE	0 to 255 (NR1)	Sets the contents of the Standard Event Status Enable Register	*3	121
∗ESE?	0 to 255 (NR1)	Queries the Standard Event Status Enable Register	*2	121
∗ESR?	0 to 255 (NR1)	Queries and clear the Standard Event Status Register	*2	121
∗SRE	0 to 255 (NR1)	Sets the Service Request Enable Register	*3	122
∗SRE?	0 to 255 (NR1)	Queries the contents of the Service Request Enable Register	*2	122
∗STB?	0 to 255 (NR1)	Queries the Status Byte Register	*2	122
∗TRG		Requests a sampling	*1	122

Error description (an error occurs when executing messages in the following cases):

*1 Command Error.....When data is present after the command
*2 Query Error.....When the response message exceeds 64 bytes
*3 Execution Error.....When invalid character or numeric data is present

Device-Specific Commands

Message ([ ] = optional)	Data Formats (Response data if a Query)	Description	Ref page
Event Registers			
:ESE0	0 to 255	Sets Event Status Enable Register 0	123
:ESE0?	0 to 255	Queries Event Status Enable Register 0	123
:ESR0?	0 to 255	Queries Event Status Register 0	123
:ESE1	0 to 255	Sets Event Status Enable Register 1	123
:ESE1?	0 to 255	Queries Event Status Enable Register 1	123
:ESR1?	0 to 255	Queries Event Status Register 1	123
Measurement Mode			
:FUNCtion	RV/ RESistance/ VOLTage	Sets measurement mode	124
:FUNCtion?	RV/ RESistance/ VOLTage	Queries measurement mode	124
Measurement Range			
:RESistance:RANGe	0 to 3100	Sets resistance measurement range	124
:RESistance:RANGe?	3.000E-3 to 3.0000E+3	Queries resistance measurement range	124
:VOLTage:RANGe	-1000 to 1000	Sets voltage measurement range	124
:VOLTage:RANGe?	10.00000E+0 to 1.00000E+3	Queries voltage measurement range	124
Auto Range			
:AUTorange	1/ 0/ ON/OFF	Sets the auto range	125
:AUTorange?	ON/ OFF	Queries the auto range setting	125
Zero-Adjust			
:ADJust:CLEAr		Cancels zero-adjustment	125
:ADJust?	0/ 1	Executes zero-adjustment and queries the result	125
Sampling Rate			
:SAMPle:RATE	FAST/ MEDium/ SLOW	Sets the sampling rate	125
:SAMPle:RATE?	FAST/ MEDium/ SLOW	Queries the sampling rate setting	125
Averaging Function			
:CALCulate:AVERage:STATe	1/ 0/ ON/OFF	Sets averaging function execution	126
:CALCulate:AVERage:STATe?	ON/ OFF	Queries the averaging function execution setting	126
:CALCulate:AVERage	2 to 16	Sets the no. of samples to average	126
:CALCulate:AVERage?	2 to 16	Queries the no. of samples to average setting	126
Comparator			
:CALCulate:LIMit:STATe	1/ 0/ ON/OFF	Sets comparator execution	126
:CALCulate:LIMit:STATe?	ON/OFF	Queries the comparator execution setting	126

Message ([ ] = optional)	Data Formats (Response data if a Query)	Description	Ref page
Comparator			
:CALCulate:LIMit:BEEPer	OFF/ HL/ IN/ BOTH1 / BOTH2	Sets the comparator judgment beeper setting	127
:CALCulate:LIMit:BEEPer?	OFF/ HL/ IN/ BOTH1 / BOTH2	Queries the comparator judgment beeper setting	127
:CALCulate:LIMit:RESistance:MODE	HL/ REF	Sets the resistance comparator mode setting	127
:CALCulate:LIMit:RESistance:MODE?	HL/ REF	Queries the resistance comparator mode setting	127
:CALCulate:LIMit:VOLTage:MODE	HL/ REF	Sets the voltage comparator mode setting	127
:CALCulate:LIMit:VOLTage:MODE?	HL/ REF	Queries the voltage comparator mode setting	127
:CALCulate:LIMit:RESistance:UPPer	<Upper threshold>	Sets the resistance comparator upper threshold setting	128
:CALCulate:LIMit:RESistance:UPPer?	<Upper threshold>	Queries the resistance comparator upper threshold setting	128
:CALCulate:LIMit:VOLTage:UPPer	<Upper threshold>	Sets the voltage comparator upper threshold setting	128
:CALCulate:LIMit:VOLTage:UPPer?	<Upper threshold>	Queries the voltage comparator upper threshold setting	128
:CALCulate:LIMit:RESistance:LOWer	<Lower threshold>	Sets the resistance comparator lower threshold setting	129
:CALCulate:LIMit:RESistance:LOWer?	<Lower threshold>	Queries the resistance comparator lower threshold setting	129
:CALCulate:LIMit:VOLTage:LOWer	<Lower threshold>	Sets the voltage comparator lower threshold setting	129
:CALCulate:LIMit:VOLTage:LOWer?	<Lower threshold>	Queries the voltage comparator lower threshold setting	129
:CALCulate:LIMit:RESistance:REFerence	<Reference value>	Sets the resistance comparator reference value	130
:CALCulate:LIMit:RESistance:REFerence?	<Reference value>	Queries the resistance comparator reference value	130
:CALCulate:LIMit:VOLTage:REFerence	<Reference value>	Sets the voltage comparator reference value	130
:CALCulate:LIMit:VOLTage:REFerence?	<Reference value>	Queries the voltage comparator reference value	130
:CALCulate:LIMit:RESistance:PERCent	<Tolerance (%)>	Sets the resistance comparator decision tolerance setting	131
:CALCulate:LIMit:RESistance:PERCent?	<Tolerance (%)>	Queries the resistance comparator decision tolerance setting	131
:CALCulate:LIMit:VOLTage:PERCent	<Tolerance (%)>	Sets the voltage comparator decision Tolerance setting	131
:CALCulate:LIMit:VOLTage:PERCent?	<Tolerance (%)>	Queries the voltage comparator decision tolerance setting	131
:CALCulate:LIMit:RESistance:RESult?	HI/ IN/ LO/ OFF/ ERR	Queries resistance comparator judgment results	132
:CALCulate:LIMit:VOLTage:RESult?	HI/ IN/ LO/ OFF/ ERR	Queries voltage comparator judgment results	132
:CALCulate:LIMit:ABS	1/0/ON/OFF	Sets the comparator absolute value judgment function	132
:CALCulate:LIMit:ABS?	ON/OFF	Queries the comparator absolute value judgment function	132

Message ([ ] = optional)	Data Formats (Response data if a Query)	Description	Ref page
Statistical Functions			
:CALCulate:STATistics:STATe	1/ 0/ ON/OFF	Sets statistical calculation function execution	133
:CALCulate:STATistics:STATe?	ON/ OFF	Queries the statistical calculation function execution setting	133
:CALCulate:STATistics:CLEAr		Clears statistical calculation results	133
:CALCulate:STATistics:RESistance:NUMBer?	<Total data count>, <Valid data count>	Queries the resistance data count	134
:CALCulate:STATistics:VOLTage:NUMBer?	<Total data count>, <Valid data count>	Queries the voltage data count	134
:CALCulate:STATistics:RESistance:MEAN?	<Mean>	Queries the resistance mean value	134
:CALCulate:STATistics:VOLTage:MEAN?	<Mean>	Queries the voltage mean value	134
:CALCulate:STATistics:RESistance:MAXimum?	<Maximum value>, <Data No. of Maximum value>	Queries the resistance maximum value	135
:CALCulate:STATistics:VOLTage:MAXimum?	<Maximum value>,<Data No. of Maximum value>	Queries the voltage maximum value	135
:CALCulate:STATistics:RESistance:MINimum?	<Minimum value>, <Data No. of Maximum value>	Queries the resistance minimum value	135
:CALCulate:STATistics:VOLTage:MINimum?	<Minimum value>, <Data No. of Maximum value>	Queries the voltage minimum value	135
:CALCulate:STATistics:RESistance:LIMit?	<Hi count>,<IN count>, <Lo count>, <Measurement fault count >	Queries comparator results of resistance measurement	136
:CALCulate:STATistics:VOLTage:LIMit?	<Hi count>,<IN count>, <Lo count>, <Measurement fault count >	Queries comparator results of voltage measurement	136
:CALCulate:STATistics:RESistance:DEViation?	<σ_n>, <σ_{n-1}>	Queries standard deviation of resistance measurement	136
:CALCulate:STATistics:VOLTage:DEViation?	<σ_n>, <σ_{n-1}>	Queries standard deviation of voltage measurement	136
:CALCulate:STATistics:RESistance:CP?	<Cp>, <CpK>	Queries process capability indices of resistance measurement	137
:CALCulate:STATistics:VOLTage:CP?	<Cp>, <CpK>	Queries process capability indices of voltage measurement	137
Memory Function			
:MEMory:STATe	1/ 0/ ON/OFF	Sets the memory function state	137
:MEMory:STATe?	ON/ OFF	Queries the memory function state	137
:MEMory:CLEAr		Clears instrument memory	137
:MEMory:COUNt?	0 to 400	Queries the memory data count	138
:MEMory:DATA?	[STEP]	Queries the memory data	138
Self-Calibration			
:SYSTem:CALibration		Executes self-calibration	139
:SYSTem:CALibration:AUTO	1/ 0/ ON/OFF	Sets automatic self-calibration	139

Message ([ ] = optional)	Data Formats (Response data if a Query)	Description	Ref page
:SYSTem:CALibration:AUTO?	ON/ OFF	Queries the automatic self-calibration setting	139
Trigger Input Measured Value Ouput			
:SYSTem:DATAout	1/ 0/ ON/OFF	Sets measurement value output upon triggering	139
:SYSTem:DATAout?	ON/ OFF	Queries measurement value output upon triggering	139
Key Beeper			
:SYSTem:BEEPer:STATe	1/ 0/ ON/OFF	Sets the key beeper	140
:SYSTem:BEEPer:STATe?	ON/ OFF	Queries the key beeper setting	140
Line Frequency			
:SYSTem:LFRequency	AUTO/50/ 60	Selects the AC line frequency	140
:SYSTem:LFRequency?	AUTO/50/ 60	Queries the AC line frequency selection	140
Key-Lock			
:SYSTem:KLOCk	1/ 0/ ON/OFF	Sets the key-lock	140
:SYSTem:KLOCk?	ON/ OFF	Queries the key-lock setting	140
EXT I/O Output			
:SYSTem:ELOCk	1/ 0/ ON/OFF	Sets the external input terminal lock	141
:SYSTem:ELOCk?	ON/ OFF	Queries the external input terminal lock on/off setting	141
Local			
:SYSTem:LOCal		Sets local control	141
Saving and Loading Measurement Setting States			
:SYSTem:SAVE	<Table No.>	Saves the measurement setting state	141
:SYSTem:LOAD	<Table No.>	Loads a measurement setting state	141
:SYSTem:BACKup		Backups current measurement configuration	141
Header Present			
:SYSTem:HEADer	1/ 0/ ON/OFF	Sets header present	142
:SYSTem:HEADer?	ON/ OFF	Queries the header present setting	142
ERR Output			
:SYSTem:ERRor	SYNChronous/ ASYNchronous	Sets error output timing	142
:SYSTem:ERRor?	SYNCHRONOUS/ ASYNCHRONOUS	Queries the error output timing setting	142
EOM Output			
:SYSTem:EOM:MODE	<HOLD/PULSe>	Selects the EOM output mode	143
:SYSTem:EOM:MODE?	(<HOLD/PULSE>)	Queries the EOM output mode setting	143

Message ([ ] = optional)	Data Formats (Response data if a Query)	Description	Ref page
:SYSTem:EOM:PULSe	<HOLD/PULSe>	Selects the EOM pulse width	143
:SYSTem:EOM:PULSe?	(0.001 to 0.099)	Queries the EOM pulse width setting	143
Terminator			
:SYSTem:TERMinator	0/ 1	Sets the terminator	142
:SYSTem:TERMinator?	0/ 1	Queries the terminator	142
System Reset			
:SYSTem:RESet		Executes a system reset, including saved measurement setting state data	143
EXT I/O			
:IO:OUT	0 to 1023	EXT I/O output	144
:IO:IN?	0 to 31	EXT I/O input	144
Trigger			
:INITiate:CONTinuous	1/ 0/ ON/OFF	Sets continuous measurement	147
:INITiate:CONTinuous?	ON/ OFF	Queries the continuous measurement setting	147
:INITiate[:IMMediate]		Trigger wait setting	147
Trigger Source Setting			
:TRIGger:SOURce	IMMediate/ EXTernal	Sets the trigger source	148
:TRIGger:SOURce?	IMMEDIATE/ EXTERNAL	Queries the trigger source setting	148
:TRIGger:DELay:STATe	1/ 0/ ON/OFF	Sets the trigger delay	148
:TRIGger:DELay:STATe?	ON/ OFF	Queries the trigger delay setting	148
:TRIGger:DELay	<Delay time>	Sets trigger delay time	149
:TRIGger:DELay?	0 to 9.999	Queries the trigger delay time	149
Reading Measured Values			
:FETCh?	<Measured resistance value>, <Measured voltage value> ΩV mode <Measured resistance value> Ω mode <Measured voltage value> V mode	Reads the most recent measurement	149
:READ?	<Measured resistance value>, <Measured voltage value> ΩV mode <Measured resistance value> Ω mode <Measured voltage value> V mode	Executes a measurement and read the measured values	150

8.6 Message Reference

< >: Indicates the contents (character or numeric parameters) of the data portion of a message.
Character parameters are returned as all capital letters.

Numeric Parameters:
- NRf Number format may be any of NR1, NR2 and NR3
- NR1 Integer data (e.g.: +12, -23, 34)
- NR2 Fixed-point data(e.g.: +1.23, -23.45, 3.456)
- NR3 Floating-point exponential representation data (e.g.: +1.0E-2, -2.3E+4)

Shows the command description. → Read/Write the Standard Event Status Enable Register (SESER)

Shows the message syntax. → **Syntax**

Explains the command data or response message.

Syntax	Command	*ESE <0 to 255 (NR1)>
	Query	*ESE?
	Response	<0 to 255 (NR1)>

Describes the message. → **Description**

Description	Command	The SESER mask is set to the numerical value 0 to 255. The initial value (at power-on) is 0.
	Query	The contents of the SESER, as set by the *ESE command, are returned as an NR1 value (0 to 255).

128	64	32	16	8	4	2	1
bit 7	bit 6	bit 5	bit 4	bit 3	bit 2	bit 1	bit 0
PON	URQ	CME	EXE	DDE	QYE	RQC	OPC

Shows an example of an actual command application.
(Normally described with HEADER ON (except the HEADER command itself).) → **Example**

Example	Command	*ESE 36 (Sets bits 5 and 2 of SESER)

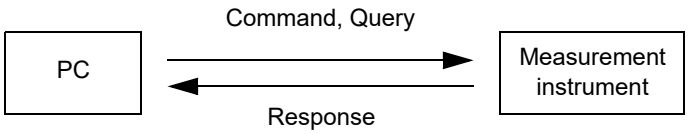

Standard Commands

Messages specific to the RS-232C or GP-IB interface are identified by their corresponding symbols.

System Data Command

Queries device ID.

Syntax
Query `*IDN?`
Response <Manufacturer's name>,<Model name>,0,<Software version>

Description
Query Queries the device manufacturer's name, model name and software version.

Example
Query `*IDN?`
Response `HIOKI,BT3564,0,V1.00`
The Device ID is Hioki BT3564, 0, software version 1.00.

Note
- The response message has no header.

Internal Operation Command

Initialize Device

Syntax
Command `*RST`

Description
Command Resets instrument settings (other than saved data) to factory defaults. Operation returns to the initial display after initialization.

Note
- The communication conditions are not initialized.
- To initialize saved data as well, send the `:SYSTem:RESet` command.

Execute Self-Test and Query the Result

Syntax
Query `*TST?`
Response <0 to 3>
0..... No Errors
1..... RAM Error
2..... EEPROM Error
3..... RAM and EEPROM Errors

Description
Query Perform instrument self-test and return the result as numerical value 0 to 3.

Example
Query `*TST?`
Response `1`
A RAM Error occurred.

Synchronization Commands

Set the OPC bit of SESR When Finished All Pending Operations

Syntax Command `*OPC`

Description Command Sets OPC bit 0 of the Standard Event Status Register (SESR) when all prior commands have finished processing.

Example Command `A;B;*OPC;C`
The OPC bit of the SESR is set after commands A and B have finished processing.

Respond "1" When Finished All Pending Operations

Syntax Query `*OPC?`

Response 1

Description Query Returns “1” when processing of commands received before the *OPC command completes.

Wait for Pending Commands to Finish

Syntax Command `*WAI`

Description Command The instrument waits until all prior commands finish before executing any subsequent commands.

Note The `*WAI` command is supported because it is defined in IEEE 488.2-1987, but because all Model BT3564 device-specific commands are sequential types, this command has no actual affect.

Status and Event Control Commands

Clear the Status Byte and Related Queues (Except the Output Queue)

Syntax Command `*CLS`

Description Command Clears the event registers corresponding to each bit of the Status Byte Register. Also clears the Status Byte Register.

Note RS-232C The output queue is unaffected.

GP-IB The output queue, the various enable registers and MAV bit 4 of the Status Byte Register are unaffected.

Set and Query the Standard Event Status Enable Register (SESER)

Syntax

Command *ESE <0 to 255>

Query *ESE?

Response <0 to 255 (NR1)>

Description

Command The SESER mask is set to the numerical value 0 to 255.
The initial value (at power-on) is 0.

Query The contents of the SESER, as set by the *ESE command, are returned as an NR1 value (0 to 255).

128 bit 7	64 bit 6	32 bit 5	16 bit 4	8 bit 3	4 bit 2	2 bit 1	1 bit 0
PON	URQ	CME	EXE	DDE	QYE	RQC	OPC

Example

Command *ESE 36
Sets bits 5 and 2 of SESER.

Query *ESE?

Response 36
SESER has been set to bit 5 and bit 2.

Query and Clear the Standard Event Status Register (SESR)

Syntax

Query *ESR?

Response <0 to 255 (NR1)>

Description

Query Returns the contents of the SESR as an NR1 value from 0 to 255, then clears register contents.
The response message has no header.

RS-232C

128 bit 7	64 bit 6	32 bit 5	16 bit 4	8 bit 3	4 bit 2	2 bit 1	1 bit 0
PON	unused	CME	EXE	DDE	QYE	unused	unused

GP-IB

128 bit 7	64 bit 6	32 bit 5	16 bit 4	8 bit 3	4 bit 2	2 bit 1	1 bit 0
PON	URQ	CME	EXE	DDE	QYE	RQC	OPC

Example

Query *ESR?

Response 32
Bit 5 of the SESR was set to 1.

Set and Query the Service Request Enable Register (SRER)

Syntax

Command *SRE <0 to 255>

Query *SRE?

Response <0 to 255 (NR1)>

Description

Command The SRER mask is set to the numerical value 0 to 255.
Although NRf numerical values are accepted, values to the right of the decimal are rounded to the nearest integer.
Bit 6 and unused bits 2, 3 and 7 are ignored.
The data is initialized to zero at power-on.

Query The contents of the SRER, as set by the *SRE command, are returned as an NR1 value (0 to 255). Bit 6 and unused bits 2, 3 and 7 always return as zero.

128 bit 7	64 bit 6	32 bit 5	16 bit 4	8 bit 3	4 bit 2	2 bit 1	1 bit 0
unused	0	ESB	MAV	unused	unused	ESE1	ESE0

Example

Command *SRE 33
Set SRER bits 0 and 5 to 1.

Query *SRE?

Response 33
SRER bits 0 and 5 have been set to 1.

Query the Status Byte and MSS Bit

Syntax

Query *STB?

Response <0 to 255 (NR1)>

Description

Query The contents of the STB are returned as an NR1 value (0 to 255). The response message has no header.

128 bit 7	64 bit 6	32 bit 5	16 bit 4	8 bit 3	4 bit 2	2 bit 1	1 bit 0
unused	MSS	ESB	MAV	unused	unused	ESE1	ESE0

Example

Query *STB?

Response 16
STB bit 4 has been set to 1.

Request a Sample

Syntax

Command *TRG

Description

Command Performs one measurement when external triggering is enabled.
When Statistical Calculation is ON, imports calculation data.
Wait 100 ms before applying the trigger with *TRG immediately after changing the measuring conditions during measurement.

Device-Specific Commands

Set and Query Device-Specific Event Status Enable Registers ESER0

Syntax

Command **:ESE0** <0 to 255>

Query **:ESE0?**

Response <0 to 255 (NR1)>

Description

Command Sets the mask pattern in Event Status Enable Register 0 (ESER0) for the Event Status Register.

Query Queries the mask pattern in Event Status Enable Register 0 (ESER0) for the Event Status Register.

128 bit 7	64 bit 6	32 bit 5	16 bit 4	8 bit 3	4 bit 2	2 bit 1	1 bit 0
unused	unused	ERR	unused	unused	unused	INDEX	EOM

Note

The data is initialized to zero at power-on.

Set and Query Device-Specific Event Status Enable Registers ESER1

Syntax

Command **:ESE1** <0 to 255>

Query **:ESE1?**

Response <0 to 255 (NR1)>

Description

Command Sets the mask pattern in Event Status Enable Register 1 (ESER1) for the Event Status Register.

128 bit 7	64 bit 6	32 bit 5	16 bit 4	8 bit 3	4 bit 2	2 bit 1	1 bit 0
FAIL	AND	V-Hi	V-IN	V-Lo	R-Hi	R-IN	R-Lo

Note

The data is initialized to zero at power-on.

Read Device-Specific Event Status Registers ESR0 and ESR1

Syntax

Query **:ESR0?**
:ESR1?

Response <0 to 255 (NR1)>

Note

For more information about the contents of the **:ESR0** and **:ESR1** registers, see the description of the **:ESR0** and **:ESR1** commands.

Executing **:ESR0?** clears the contents of ESR0.
Executing **:ESR1?** clears the contents of ESR1.

Select and Query the Measurement Mode Setting

Syntax

Command `:FUNCtion` <RV/ RESistance/ VOLTage>

Query `:FUNCtion?`

Response <RV/ RESISTANCE/ VOLTAGE>
RV .....ΩV mode
(Resistance and voltage measurement)
RESISTANCE .....Ω mode (Resistance measurement)
VOLTAGE .....V mode (Voltage measurement)

Example

Command `:FUNC RV`
Selects the ΩV mode.

Query `:FUNC?`

Response `RV`
ΩV mode has been selected.

Set and Query the Resistance Measurement Range

Syntax

Command `:RESistance:RANGe` < 0 to 3100>

Query `:RESistance:RANGe?`

Response <measurement range(NR3)>
<measurement range(NR3)> = 3.0000E-3/ 30.000E-3/ 300.00E-3/ 3.0000E+0/ 30.000E+0/ 300.00E+0/ 3.0000E+3

Example

Command `:RES:RANG 120E-3`
Selects the most suitable resistance measurement range for measuring 120 mΩ.

Query `:RES:RANG?`
Response `300.00E-3`
The current resistance measurement range is 300 mΩ.

Note Changing the resistance measurement range clears stored measurement data.

Set and Query the Voltage Measurement Range

Syntax

Command `:VOLTage:RANGe` <-1000 to 1000>

Query `:VOLTage:RANGe?`

Response <measurement range(NR3)>
<measurement range(NR3)>=10.00000E+0/100.0000E+0/1.00000E+3

Example

Command `:VOLT:RANG 15`
Selects the voltage measurement range for measuring 15 V.

Query `:VOLT:RANG?`
Response `100.0000E+0`
The voltage measurement range is fixed at 100 V.

Set and Query the Auto-Ranging Setting

Syntax

Command `:AUTorange` <1, 0, ON or OFF>

Query `:AUTorange?`

Response <ON or OFF>

Example

Command `:AUT ON`

Note

- Attempting to enable auto-ranging when the Comparator or Memory function is enabled results in a execution error.
- The auto-ranging setting applies to both resistance measurement and voltage measurement.

Cancel Zero-Adjustment

Syntax

Command `:ADJust:CLEAr`

Description

Command Clears zero adjustment.

Execute Zero Adjustment and Query the Result

Syntax

Query `:ADJust?`

Response <0/ 1 (NR1)>
0..... Zero adjustment succeeded
1..... Zero adjustment failed
The acceptable range of zero adjustment for both resistance and voltage is from -1000 to +1000 dgt.

Description

Query Queries whether zero adjustment has succeeded or failed.

Example

Query `:ADJ?`
Response `0`
Zero adjustment executed successfully.

Note

Zero-adjust processing may take time. Either allow an interval to elapse before receiving the response data or set the timeout time to about 10 sec.

Select and Query the Sampling Rate setting

Syntax

Command `:SAMPle:RATE` <FAST/ MEDium/ SLOW>

Query `:SAMPle:RATE?`

Response <FAST/ MEDIUM/ SLOW>

Example

Command `:SAMP:RATE MED`

Query `:SAMP:RATE?`
Response `MEDIUM`

Set and Query the Averaging Function Setting

Syntax

Command `:CALCulate:AVERage:STATe` <1, 0, ON or OFF>

Query `:CALCulate:AVERage:STATe?`

Response <ON or OFF>

Example

Command `:CALC:AVER:STAT OFF`

Query `:CALC:AVER:STAT?`

Response `OFF`

Set and Query the No. of samples to average

Syntax

Command `:CALCulate:AVERage` <2 to 16>

Query `:CALCulate:AVERage?`

Response <2 to 16 (NR1)>

Example

Command `:CALC:AVER 10`

Query `:CALC:AVER?`

Response `10`

Set and Query the Comparator

Syntax

Command `:CALCulate:LIMit:STATe` <1, 0, ON or OFF>

Query `:CALCulate:LIMit:STATe?`

Response <ON or OFF>

Example

Command `:CALC:LIM:STAT ON`

Query `:CALC:LIM:STAT?`

Response `ON`

Note

- When the Comparator function is enabled, auto-ranging is disabled.
- Switching the Comparator function on/off or changing its settings clears stored measurement data (memory function).

Set and Query Comparator Judgments

Syntax

Command `:CALCulate:LIMit:BEEPer` <OFF/HL/IN/BOTH1/BOTH2>

Query `:CALCulate:LIMit:BEEPer?`

Response <OFF/ HL/ IN/ BOTH1/ BOTH2>

OFF.....No beeps sound.

HL .....The beeper sounds upon Hi and Lo judgments.

IN .....The beeper sounds upon IN judgments.

BOTH1.....The beeper sounds continuously upon IN judgments, and repeatedly upon Hi and Lo judgments.

BOTH2.....The beeper sounds once (briefly) upon IN judgments, and repeatedly upon Hi and Lo judgments.

Example

Command `:CALC:LIM:BEEP IN`

Query `:CALC:LIM:BEEP?`

Response `IN`

Set and Query the Comparator Mode Setting

(Resistance Measurement)

Syntax

Command `:CALCulate:LIMit:RESistance:MODE` <HL/ REF>

Query `:CALCulate:LIMit:RESistance:MODE?`

Response <HL/ REF>

HL .....Decision by preset upper and lower thresholds.

REF.....Decision by a reference value and tolerance.

Example

Command `:CALC:LIM:RES:MODE REF`

Query `:CALC:LIM:RES:MODE?`

Response `REF`

(Voltage Measurement)

Syntax

Command `:CALCulate:LIMit:VOLTage:MODE` <HL/ REF>

Query `:CALCulate:LIMit:VOLTage:MODE?`

Response <HL/ REF>

HL .....Decision by preset upper and lower thresholds.

REF.....Decision by a reference value and tolerance.

Set and Query the Comparator Upper Threshold Setting

(Resistance Measurement)

Syntax

Command `:CALCulate:LIMit:RESistance:UPPer` <Upper threshold>

Query `:CALCulate:LIMit:RESistance:UPPer?`

Response <Upper threshold>
<Upper threshold> = 0 to 99999 (NR1)

Example

Command `:CALC:LIM:RES:UPP 28593`
Sets the upper threshold to 285.93 mΩ (with the 300 mΩ range selected)
(If the 3 Ω range is selected, the threshold is set to 2.8593 Ω)

Query `:CALC:LIM:RES:UPP?`

Response `28593`

Note

The value is sent as a whole integer (count). To set 120.53 mΩ with the 300 mΩ range, send the following:
`:CALC:LIM:RES:UPP 12053`

(Voltage Measurement)

Syntax

Command `:CALCulate:LIMit:VOLTage:UPPer` <Upper threshold>

Query `:CALCulate:LIMit:VOLTage:UPPer?`

Response <Upper threshold>
<Upper threshold> = 0 to 999999 (NR1)

Example

Command `:CALC:LIM:VOLT:UPP 380000`
Sets the upper threshold to 3.80000 V. (with the 10 V range selected)

Query `:CALC:LIM:VOLT:UPP?`

Response `380000`

Note

The value is sent as a whole integer (count).
To set 48.5003 V with the 100 V range, send the following:
`:CALC:LIM:VOLT:UPP 485003`

Set and Query the Comparator Lower Threshold Setting

(Resistance Measurement)

Syntax

Command `:CALCulate:LIMit:RESistance:LOWer` <Lower threshold>

Query `:CALCulate:LIMit:RESistance:LOWer?`

Response <Lower threshold>
<Lower threshold> = 0 to 99999 (NR1)

Example

Command `:CALC:LIM:RES:LOW 28406`
Sets the lower threshold to 284.06 mΩ (with the 300 mΩ range selected)
(If the 3 Ω range is selected, the threshold is set to 2.8406 Ω)

Query `:CALC:LIM:RES:LOW?`

Response `28406`

Note

The value is sent as a whole integer (count). To set 120.53 mΩ with the 300 mΩ range, send the following:
`:CALC:LIM:RES:LOW 12053`

(Voltage Measurement)

Syntax

Command `:CALCulate:LIMit:VOLTage:LOWer` <Lower threshold>

Query `:CALCulate:LIMit:VOLTage:LOWer?`

Response <Lower threshold>
<Lower threshold> = 0 to 999999 (NR1)

Example

Command `:CALC:LIM:VOLT:LOW 360000`
Sets the lower threshold to 3.60000 V. (with the 10 V range selected)

Query `:CALC:LIM:VOLT:LOW?`

Response `360000`

Note

The value is sent as a whole integer (count).
To set 45.9997 V with the 100 V range, send the following:
`:CALC:LIM:VOLT:LOW 459997`

Set and Query the Comparator Reference Value

(Resistance Measurement)

Syntax

Command `:CALCulate:LIMit:RESistance:REFerence` <Reference value>

Query `:CALCulate:LIMit:RESistance:REFerence?`

Response <Reference value>
<Reference value> = 0 to 99999 (NR1)

Example

Command `:CALC:LIM:RES:REF 5076`
Sets the reference value to 50.76 mΩ (with the 300 mΩ range selected)
(If the 3 Ω range is selected, the threshold is set to 0.5076 Ω)

Query `:CALC:LIM:RES:REF?`

Response `5076`

Note

The value is sent as a whole integer (count). To set 120.53 mΩ with the 300 mΩ range, send the following:
`:CALC:LIM:RES:REF 12053`

(Voltage Measurement)

Syntax

Command `:CALCulate:LIMit:VOLTage:REFerence` <Reference value>

Query `:CALCulate:LIMit:VOLTage:REFerence?`

Response <Reference value>
<Reference value> = 0 to 999999 (NR1)

Example

Command `:CALC:LIM:VOLT:REF 370000`
Sets the reference value to 3.70000 V. (with the 10 V range selected)

Query `:CALC:LIM:VOLT:REF?`

Response `370000`

Note

The value is sent as a whole integer (count).
To set 47.0000 V with the 100 V range, send the following:
`:CALC:LIM:VOLT:REF 470000`

Set and Query the Comparator Decision Tolerance Setting (Comparator Function)

(Resistance Measurement)

Syntax

Command `:CALCulate:LIMit:RESistance:PERCent` <Tolerance (%)>

Query `:CALCulate:LIMit:RESistance:PERCent?`

Response <Tolerance (%)>
<Tolerance (%)> = 0 to 99.999 (NR2)

Example

Command `:CALC:LIM:RES:PERC 0.3`

Query `:CALC:LIM:RES:PERC?`

Response `0.300`

(Voltage Measurement)

Syntax

Command `:CALCulate:LIMit:VOLTage:PERCent` <Tolerance (%)>

Query `:CALCulate:LIMit:VOLTage:PERCent?`

Response <Tolerance (%)>
<Tolerance (%)> = 0 to 99.999 (NR2)

Example

Command `:CALC:LIM:VOLT:PERC 1.538`

Query `:CALC:LIM:VOLT:PERC?`

Response `1.538`

Query Comparator Judgment Results

(Resistance Measurement)

Syntax Query `:CALCulate:LIMit:RESistance:RESult?`

Response <HI/ IN/ LO/ OFF/ ERR>

Example Query `:CALC:LIM:RES:RES?`

Response `HI`

(Voltage Measurement)

Syntax Query `:CALCulate:LIMit:VOLTage:RESult?`

Response <HI/ IN/ LO/ OFF/ ERR>

Set and Query the Comparator Absolute Value Judgment Function

Syntax Command `:CALCulate:LIMit:ABS` <1, 0, ON or OFF>

Query `:CALCulate:LIMit:ABS?`

Response <ON or OFF>

ON..... Absolute value judgment function on

OFF..... Absolute value judgment function off

Note The absolute value is only taken for measured voltage values.

Execute Statistical Functions

Syntax

Command `:CALCulate:STATistics:STATe` <1, 0, ON or OFF>

Query `:CALCulate:STATistics:STATe?`

Response <ON or OFF>

Example

Command `:CALC:STAT:STAT ON`

Query `:CALC:STAT:STAT?`

Response `ON`

NOTE

About the Statistical Calculation function

Data samples can be acquired by the following three methods:

- Press the **TRIG** key
- Apply an EXT I/O $\overline{\text{TRIG}}$ signal
- Send the `*TRG` command

The `:CALCulates:STATistics:STATe` command does not clear calculation results.

When the valid data count is zero, σ_{n-1} returns 0.

Clearing calculation results does not disable the Statistical Calculation function.

The upper limit of Cp and CpK is 99.99. Cp and CpK values greater than 99.99 are returned as 99.99.

The lower limit of Cp and CpK is 0. Cp and CpK values less than 0 are returned as 0.00.

Clear Statistical Calculation Results

Syntax

Command `:CALCulate:STATistics:CLEAr`

Query the Data Count

(Resistance Measurement)

Syntax Query `:CALCulate:STATistics:RESistance:NUMBer?`

Response <Total data count (NR1)>,<Valid data count (NR1)>
<Total data count (NR1)> = 0 to 30000 (NR1)
<Valid data count (NR1)> = 0 to 30000 (NR1)

Example Query `:CALC:STAT:RES:NUMB?`

Response `22,20`

Note Measurement faults and out-of-range "OF" measurements are ignored for statistical calculations.

(Voltage Measurement)

Syntax Query `:CALCulate:STATistics:VOLTage:NUMBer?`

Response <Total data count (NR1)>,<Valid data count (NR1)>

Example Query `:CALC:STAT:VOLT:NUMB?`

Response `22,20`

Note Measurement faults and out-of-range "OF" measurements are ignored for statistical calculations.

Query the Mean value

(Resistance Measurement)

Syntax Query `:CALCulate:STATistics:RESistance:MEAN?`

Response <Mean (NR3)>

Example Query `:CALC:STAT:RES:MEAN?`

Response `295.76E-3`

(Voltage Measurement)

Syntax Query `:CALCulate:STATistics:VOLTage:MEAN?`

Response <Mean (NR3)>

Example Query `:CALC:STAT:VOLT:MEAN?`

Response `1.3923E+0`

Query the Maximum value

(Resistance Measurement)

Syntax	Query	`:CALCulate:STATistics:RESistance:MAXimum?`
	Response	<Maximum value (NR3)>,<Data No. of Maximum value (NR1)>
Example	Query	`:CALC:STAT:RES:MAX?`
	Response	`297.28E-3,15`

(Voltage Measurement)

Syntax	Query	`:CALCulate:STATistics:VOLTage:MAXimum?`
	Response	<Maximum value (NR3)>,<Data No. of Maximum value (NR1)>
Example	Query	`:CALC:STAT:VOLT:MAX?`
	Response	`1.3924E+0,1`

Query the Minimum value

(Resistance Measurement)

Syntax	Query	`:CALCulate:STATistics:RESistance:MINimum?`
	Response	<Minimum value (NR3)>,<Data No. of Minimum value (NR1)>
Example	Query	`:CALC:STAT:RES:MIN?`
	Response	`294.88E-3,8`

(Voltage Measurement)

Syntax	Query	`:CALCulate:STATistics:VOLTage:MINimum?`
	Response	<Minimum value (NR3)>,<Data No. of Minimum value (NR1)>
Example	Query	`:CALC:STAT:VOLT:MIN?`
	Response	`1.3923E+0,2`

Query Comparator Judgment Results (Statistical Calculation Function)

(Resistance Measurement)

Syntax Query `:CALCulate:STATistics:RESistance:LIMit?`

Response <Hi (NR1) count>,<IN (NR1) count>,<Lo (NR1) count>,
<Measurement fault count (NR1)>

Example Query `:CALC:STAT:RES:LIM?`

Response `6,160,13,2`

(Voltage Measurement)

Syntax Query `:CALCulate:STATistics:VOLTage:LIMit?`

Response <Hi (NR1) count>,<IN (NR1) count>,
<Lo (NR1) count>,<Measurement fault count (NR1)>

Example Query `:CALC:STAT:VOLT:LIM?`

Response `1,19,0,2`

Query Standard Deviation

(Resistance Measurement)

Syntax Query `:CALCulate:STATistics:RESistance:DEViation?`

Response <σ_n (NR3)>,<σ_{n-1} (NR3)>

Example Query `:CALC:STAT:RES:DEV?`

Response `0.82E-3,0.84E-3`

(Voltage Measurement)

Syntax Query `:CALCulate:STATistics:VOLTage:DEViation?`

Response <σ_n (NR3)>,<σ_{n-1} (NR3)>

Example Query `:CALC:STAT:VOLT:DEV?`

Response `0.0000E+0,0.0000E+0`

Query the Process Capability Indices

(Resistance Measurement)

Syntax	Query	`:CALCulate:STATistics:RESistance:CP?`
	Response	<Cp (NR2)>,<CpK (NR2)>
Example	Query	`:CALC:STAT:RES:CP?`
	Response	`0.04, 0.04`

(Voltage Measurement)

Syntax	Query	`:CALCulate:STATistics:VOLTage:CP?`
	Response	<Cp (NR2)>,<CpK (NR2)>
Example	Query	`:CALC:STAT:VOLT:CP?`
	Response	`0.91, 0.00`

Set and Query the Memory Function State

Syntax	Command	`:MEMory:STATe` <1/0/ON/OFF>
	Query	`:MEMory:STATe?`
	Response	<ON/OFF>
Example	Command	`:MEM:STAT ON`
	Query	`:MEM:STAT?`
	Response	`ON`

Clear Instrument Memory

Syntax	Command	`:MEMory:CLEAr`

Query the Memory Data Count

Syntax

Query `:MEMory:COUNt?`

Response <Memory data count>
<Memory data count> = 0 to 400 (NR1)

Example

Query `:MEM:COUN?`

Response `5`

Query (Download) Memory Data

Syntax

Query `:MEMory:DATA? [STEP]`

Response <Memory data No. (NR1)>,<Measured resistance (NR3)>,<Measured voltage (NR3)>
Memory data values are returned as data objects.
If [STEP] is omitted, all memory data objects are returned continuously.

Example

Query `:MEM:DATA?`

Example

Response

```
  1,  290.60E-3,  1.3924E+0
  2,  290.54E-3,  1.3924E+0
  3,  290.50E-3,  1.3923E+0
  4,  290.43E-3,  1.3923E+0
  5,  290.34E-3,  1.3924E+0
END
```

Query `:MEM:DATA? STEP`

Response

```
  1,  290.60E-3,  1.3924E+0
N (Sent from PC)
  2,  290.54E-3,  1.3924E+0
N (Sent from PC)
  3,  290.50E-3,  1.3923E+0
N (Sent from PC)
  4,  290.43E-3,  1.3923E+0
N (Sent from PC)
  5,  290.34E-3,  1.3924E+0
N (Sent from PC)
END
```

Note

- Stored memory data objects are returned continuously, or one data object at a time. The “END” character is returned as the last data object. When the “STEP” parameter is specified, one data object is returned at a time. Sending “N” to the instrument after receiving the data causes the next data object to be returned. The memory index is an unsigned three-digit integer. Refer to “Measurement Value Formats” for format details of returned measurement values.
- A terminator is appended to the end of each returned memory data object. When sending “N” from the PC or other device, a terminator is required.
  See " Message Terminators" (⇒ p.103).
- Measured values are stored in memory when pressing the **TRIG** key, applying a signal to the $\overline{\text{TRIG}}$ EXT I/O connector or sending the `*TRG` command (while the Memory function is enabled). Up to 400 data objects can be stored. When the memory is full, additional measurement data is not stored.
- When the Memory function is enabled, auto-ranging is disabled.
- When the measurement mode is set to Ω or V, a measurement error value will be returned for functions that are not being measured.

Execute Self-Calibration

Syntax Command `:SYSTem:CALibration`

Self-Calibration State and Setting

Command `:SYSTem:CALibration:AUTO` <1, 0, ON or OFF>

Query `:SYSTem:CALibration:AUTO?`

Response <ON or OFF>
ON ... AUTO Self-Calibration selected
(executes approximately every 30 minutes)
OFF . MANUAL Self-Calibration selected

Example Command `:SYST:CAL:AUTO ON`

Query `:SYST:CAL:AUTO?`
Response `ON`

Note Even when AUTO is selected, Self-Calibration can be manually performed at any time by sending the `:SYSTem:CALibration` command.

Set and Query Measurement Value Output Upon Triggering

Command `:SYSTem:DATAout` <1, 0, ON or OFF>

Query `:SYSTem:DATAout?`

Response <ON or OFF>
ON ..... Measured values are output automatically when a trigger occurs.
OFF ..... Measured values are not output.

Example Command `:SYST:DATA OFF`

Query `:SYST:DATA?`

Response `OFF`

Note
- This function is convenient when you want to obtain measured values by applying EXT I/O trigger input. When this function is enabled and a footswitch is connected to the $\overline{\text{TRIG}}$ terminal of the EXT I/O connector, a measured value is sent to the PC automatically each time the footswitch is pressed, so there is no need to send a command from the PC to obtain measurement values.
- Refer to "Measurement Value Formats" for format details of returned measurement values.
- This function is not available when the GP-IB interface is selected.

See "4.10 Measurement Value Output Function" (⇒ p.70).

Set and Query the Key Beeper Setting

Syntax

Command `:SYSTem:BEEPer:STATe` <1, 0, ON or OFF>

Query `:SYSTem:BEEPer:STATe?`

Response <ON or OFF>

Example

Command `:SYST:BEEP:STAT ON`

Query `:SYST:BEEP:STAT?`

Response `ON`

Note

Only key-press beeps are set on or off. Comparator judgment beeps are unaffected.

Select and Query the Line Frequency Setting

Syntax

Command `:SYSTem:LFRequency` <AUTO/50/ 60>

Query `:SYSTem:LFRequency?`

Response <AUTO/50/ 60>

Example

Command `:SYST:LFR 60`

Query `:SYST:LFR?`

Response `60`

Set and Query the Key-Lock State

Syntax

Command `:SYSTem:KLOCk` <1, 0, ON or OFF>

Query `:SYSTem:KLOCk?`

Response <ON or OFF>

Example

Command `:SYST:KLOC ON`

Query `:SYST:KLOC?`

Response `ON`

Set and Query EXT I/O Lock

Syntax

Command `:SYSTem:ELOCk` <1, 0, ON or OFF>

Query `:SYSTem:ELOCk?`

Response <ON or OFF>
ON ..... EXT I/O control is disabled (preventing inadvertent operations from electrical noise).
OFF..... EXT I/O control is enabled.

Example

Command `:SYST:ELOC ON`

Query `:SYST:ELOC?`

Response `ON`

Note

This function affects only command input.

Set Local Control

Syntax

Command `:SYSTem:LOCal`

Note

Switches from remote control (REMOTE indicator lit) to local control (by panel keys).

Save and Load Measurement Values

Syntax

Command `:SYSTem:SAVE` <1 to 126>
`:SYSTem:LOAD` <1 to 126>

Note

- Attempting to load a panel number that has not been saved results in an execution error.
- Up to 126 measurement configurations can be saved and loaded. Refer to “Panel Save and Load Functions” for details.

Backup Current Measurement Configuration

Syntax

Command `:SYSTem:BACKup`

Description

Command The current measurement configuration (settings) is backed up so that when power is turned on the next time, the same configuration is restored.

Note

Saved panel and backup settings are stored in the instrument’s EEPROM. Be aware that the number of times that the EEPROM can be rewritten is limited (to about a million times).

Set and Query the Header Present Setting

Syntax

Command `:SYSTem:HEADer` <1, 0, ON or OFF>

Query `:SYSTem:HEADer?`

Response <ON or OFF>

Description

Command Specifies whether a header is sent with response messages.

Example

Command `:SYST:HEAD ON`

Query `:SYST:HEAD?`

Response `:SYSTEM:HEADER ON`

Command `:SYST:HEAD OFF`

Query `:SYST:HEAD?`

Response `:OFF`

Set and Query Error Output Timing

Syntax

Command `:SYSTem:ERRor` <SYNChronous/ ASYNchronous>

Query `:SYSTem:ERRor?`

Response <SYNCHRONOUS/ ASYNCHRONOUS>
SYNCHRONOUS.....Synchronize with EOM output
ASYNCHRONOUS .....Asynchronous with EOM output

Example

Command `:SYST:ERR ASYN`

Query `:SYST:ERR?`

Response `ASYNCHRONOUS`

Set and Query the terminator GP-IB

Syntax

Command `:SYSTem:TERMinator` <0/ 1>

Query `:SYSTem:TERMinator?`

Response <0/ 1>
0 ..... LF+EOI
1 ..... CR ,LF+EOI

Example

Command `:SYST:TERM 1`

Query `:SYST:TERM?`

Response `0`

Note

The RS-232C delimiter is fixed as CR + LF.
See " Message Terminators" (⇒ p.103).

EOM Signal Output Method Settings (software version 1.15 or later)

The following 2 methods can be selected as the $\overline{\text{EOM}}$ signal output method for external I/O. (The $\overline{\text{EOM}}$ signal is set to on at end-of-measurement and set to off according to the output method that has been set)

- HOLD Holds the EOM signal until mesurement starts by the next trigger signal.
- PULSE Sets EOM=OFF according to the specified pulse width.

Also, the pulse width can be set between 0.001 to 0.099 seconds when PULSE is selected.

EOM Output Mode Setting

Syntax

Command `:SYSTem:EOM:MODE` <HOLD/PULSE>

Query `:SYSTem:EOM:MODE?`
Response <HOLD/PULSE>

HOLD.....Holds the EOM signal until mesurement starts by the next trigger signal.

PULSE .....Sets EOM=off according to the specified pulse width.

Example

Command `:SYST:EOM:MODE PULS`

EOM Pulse Width Setting

Syntax

Command `:SYSTem:EOM:PULSe` <Pulse width>

Query `:SYSTem:EOM:PULSe?`
Response <Pulse width> = 0.001 to 0.099 (NR2)[second]

Example

Command `:SYST:EOM:PULS 0.005`

System Reset

Syntax

Command `:SYSTem:RESet`

Description

Command All settings including saved panel settings are returned to factory defaults. Refer to “Reset Function” for details.

Example

Command `:SYST:RES`

Note

- If you want to preserve saved data, use the `*RST` command instead.
- The communication conditions are not initialized.

EXT I/O Input

Syntax

Query `:IO:IN?`

Response 0 to 31(NR1)

Description

Query

Signals at the EXT I/O ($\overline{IN0}$ to $\overline{IN4}$) input terminals are read at the leading edge.
Each bit (edge data) is cleared upon reading by this query.
A bit is set when the leading edge (short-circuit between each signal terminal and the ISO_COM terminal) is detected, and is cleared when read by this query command.
See " Input Signals" (⇒ p.77).

	bit4	bit3	bit2	bit1	bit0
	$\overline{IN4}$ ($\overline{MA\text{-}NU}$)	$\overline{IN3}$ ($\overline{PRINT}$)	$\overline{IN2}$ ($\overline{0ADJ}$)	$\overline{IN1}$ ($\overline{CAL}$)	$\overline{IN0}$ ($\overline{TRIG}$)
Pin No.	26	7	21	20	1

Note

The **TRIG** key and `*TRG` command are detected in the same way as the TRIG terminal signal.

Triggering System Description

Triggering operates as follows depending on the continuous measurement setting (**:INITIATE:CONTINUOUS**) and the trigger source setting (**:TRIGGER:SOURCE**).
See "8.7 Basic Data Importing Methods" (⇒ p.157).

		Continuous Measurement (**:INITIATE:CONTINUOUS**)	
		ON	**OFF**[*1]
Trigger Source (**:TRIGGER:SOURCE**)	**IMMEDIATE** (**EXT.TRIG** not lit)	Free-Run state. Measurement continues automatically. **See** next page (**1**)	Trigger by **:INITIATE** (or **:READ?**) command. **See** next page (**2**)
	EXTERNAL (**EXT.TRIG** lit)	Trigger by TRIG terminal, **TRIG** key or ***TRG** command. After measurement, enters the trigger wait state. **See** next page (**3**)	Issue **:INITIATE** (or **:READ?**) command to wait for trigger. Trigger by $\overline{\text{TRIG}}$ terminal, **TRIG** key or ***TRG** command. **See** next page (**4**)[*2]

*1: **:INITIATE:CONTINUOUS OFF**
Can only be set by Remote command.
If this has been set to OFF when operation is returned to the Local state or power is turned off, the following state occurs when power is turned back on.
:INITIATE:CONTINUOUS ON
See " Local Function" (⇒ p.111).

*2: The ***TRG** command cannot be used for triggering while awaiting a trigger after issuing a **:READ?** command. In this case, use the $\overline{\text{TRIG}}$ terminal or **TRIG** key for triggering.

Measurement Flow

1 `:INITIATE:CONTINUOUS ON`
`:TRIGGER:SOURCE IMMEDIATE`

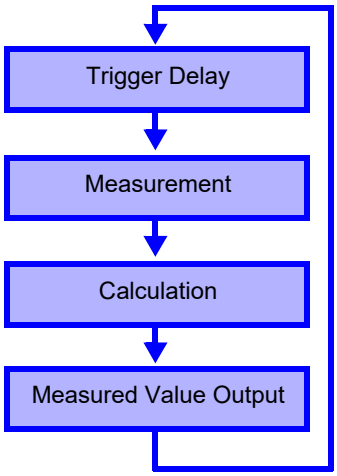

2 `:INITIATE:CONTINUOUS OFF`
`:TRIGGER:SOURCE IMMEDIATE`

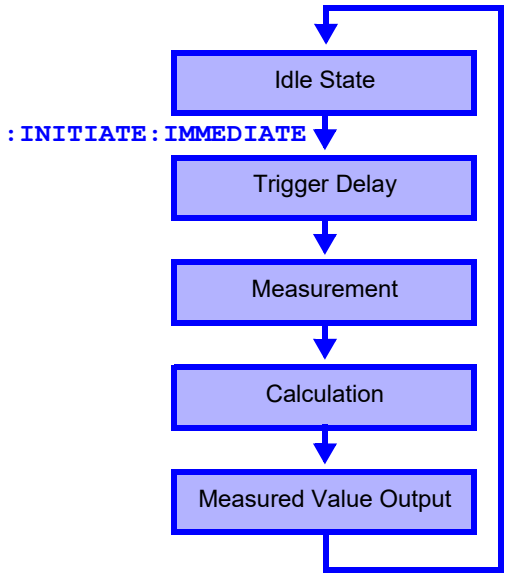

3 `:INITIATE:CONTINUOUS ON`
`:TRIGGER:SOURCE EXTERNAL`

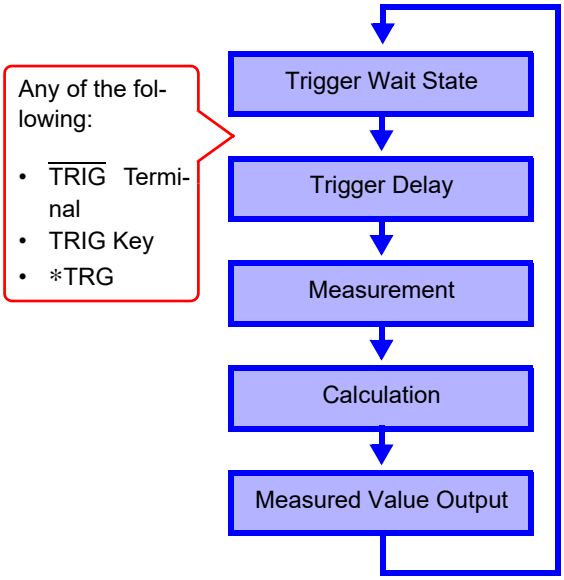

4 `:INITIATE:CONTINUOUS OFF`
`:TRIGGER:SOURCE EXTERNAL`

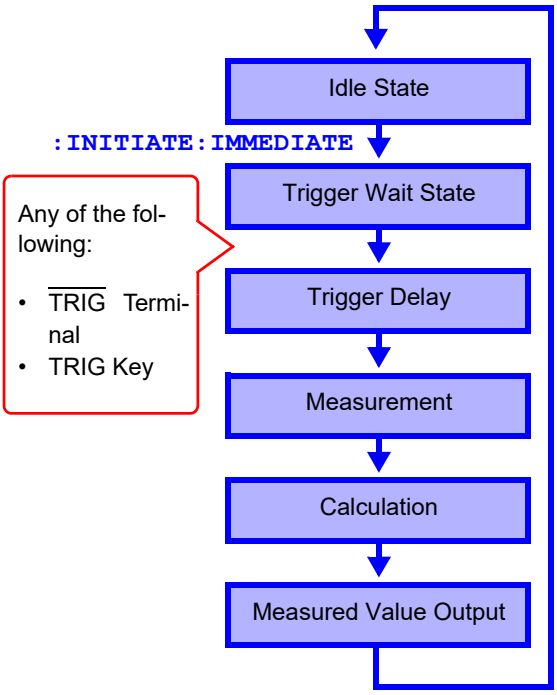

Continuous Measurement Setting

Syntax

Command `:INITiate:CONTinuous` <1, 0, ON or OFF>

Query `:INITiate:CONTinuous?`

Response <ON or OFF>
ON ..... Continuous Measurement Enabled
OFF..... Continuous Measurement Disabled

Description

Command Sets continuous measurement.

Query Queries the continuous measurement setting.

Example

Command `:INIT:CONT OFF`
Disables continuous measurement.

Query `:INIT:CONT?`
Response `ON`
Enables continuous measurement.

Note

- Continuous Measurement Enabled:
  After measurement, enters the Trigger Wait State. When the trigger source setting is IMMediate, the next trigger occurs immediately (the Free-Run State).
- Continuous Measurement Disabled:
  After measurement, enters the Idle State instead of the Trigger Wait State.
- Triggering is ignored in the Idle State. Executing :INITiate[:IMMediate] enables the Trigger Wait State.
- Continuous measurement is enabled upon exit from the Remote State.

Trigger Wait Setting

Syntax

Command `:INITiate[:IMMediate]`

Description

Command Switches triggering from the Idle State to the Trigger Wait State.

Example

Command Disable continuous measurement, and read one value for each trigger event

Send
`:TRIG:SOUR IMM`.... Trigger immediately when entering Trigger Wait State
`:INIT:CONT OFF`.... Disables continuous measurement
`:INIT`..... Enable Trigger Wait Trigger immediately upon :TRIG:SOUR IMM
`:FETC?` ..... Fetch measured value

Response `2.1641E+0`..... Measured value is 2.1641 Ω

Error

- An execution error occurs when continuous measurement is enabled (`:INITIATE:CONTINUOUS ON`).

Note

- When the trigger source is IMMediate, triggering occurs immediately before entering the Idle State.
- When the trigger source is EXTernal, the Trigger Wait State is enabled to wait for an external trigger, and when a trigger occurs, one measurement is taken before entering the Idle State.

Set and Query the Trigger Source

Syntax

Command **:TRIGger:SOURce** <IMMediate/ EXTernal>

Query **:TRIGger:SOURce?**

Response <IMMEDIATE/ EXTERNAL>
IMMEDIATE .... Internal triggering
EXTERNAL ..... External trigger source. Triggering by **TRIG** key, $\overline{\text{TRIG}}$ terminal or ***TRG** command.

Description

Command Selects the trigger source.

Query Queries the trigger source selection.

Example

Command **:TRIG:SOUR IMM**
Sets the trigger source to internal triggering.

Query **:TRIG:SOUR?**
Response **IMMEDIATE**
The trigger source is set to internal triggering.

Enable/Disable and Query Trigger Delay

Syntax

Command **:TRIGger:DELay:STATe** <1, 0, ON or OFF>

Query **:TRIGger:DELay:STATe?**

Response <ON or OFF>
ON..... Trigger delay enabled
OFF ..... Trigger delay disabled

Example

Command **:TRIG:DEL:STAT ON**
Enables trigger delay.

Query **:TRIG:DEL:STAT?**
Response **ON**
Trigger delay is enabled (ON).

Set and Query Trigger Delay Interval

Syntax

Command `:TRIGger:DELay` <0 to 9.999>

Query `:TRIGger:DELay?`

Response <0 to 9.999 (NR2)>

Description

Command Sets the trigger delay interval.

Query Queries the trigger delay interval setting.

Example

Command `:TRIG:DEL 0.058`
Sets the trigger delay to 0.058 seconds.

Query `:TRIG:DEL?`
Response `0.058`
The trigger delay is set to 0.058 seconds.

Read the Latest Measurement

Syntax

Query `:FETCh?`

Response <Measured resistance (NR3)>, <Measured voltage (NR3)> (ΩV mode)
<Measured resistance (NR3)> (Ω mode)
<Measured voltage (NR3)> (V mode)

Description

Query Reads the most recent measurement. No trigger occurs.

Example

Query `:FETC?`
Response `288.02E-3,1.3921E+0` (ΩV mode)
The last measured resistance is 288.02 mΩ, and the last measured voltage is 1.3921 V.
See " Measurement Value Formats" (⇒ p.151).

Execute a Measurement and Read the Measured Values

Syntax

Query **:READ?**

Response <Measured resistance (NR3)>, <Measured voltage (NR3)> (ΩV mode)
<Measured resistance (NR3)> (Ω mode)
<Measured voltage (NR3)> (V mode)

Description

Query Switches from the Idle State to the Trigger Wait State, then reads the next measured value. With auto-ranging enabled, the most suitable range is selected before measurement.

Trigger Source	Operation
IMMediate	Triggers and reads measured value.
EXTernal	After triggering by the $\overline{\text{TRIG}}$ terminal (EXT I/O) or **TRIG** key, reads the measured value.

Example

Query **:READ?**

Response **289.68E-3, 1.3921E+0** (ΩV mode)
Measured resistance is 289.68 mΩ, and voltage is 1.3921 V.

Error

This command causes an execution error if issued during the Continuous Measurement state (after **:INITIATE:CONTINUOUS ON**).

Note

- The next command does not execute until measurement is finished.
- When the trigger source is external, the ***TRG** command does not trigger measurement.
- Wait 100 ms before applying the trigger with **:READ?** immediately after changing the measuring conditions during measurement.

See " Measurement Value Formats" (⇒ p.151).

Measurement Value Formats

For the commands that acquire measurement values (**:FETCH?** and **:READ?**), the response formats are as follows.

Measured resistance value

Measurement range	Measured Value	±OF	Measurement Fault
3 mΩ	±**.****E-3	±10.0000E+8	+10.0000E+9
30 mΩ	±***.***E-3	±100.000E+7	+100.000E+8
300 mΩ	±****.**E-3	±1000.00E+6	+1000.00E+7
3 Ω	±**.****E+0	±10.0000E+8	+10.0000E+9
30 Ω	±***.***E+0	±100.000E+7	+100.000E+8
300 Ω	±****.**E+0	±1000.00E+6	+1000.00E+7
3000 Ω	±**.****E+3	±10.0000E+8	+10.0000E+9

Measured voltage value

Measurement range	Measured Value	±OF	Measurement Fault
10 V	±*.*****E+0	±1.00000E+9	+1.00000E+10
100 V	±**.****E+0	±10.0000E+8	+10.0000E+9
1000 V	±***.***E+0	±100.000E+7	+100.000E+8

Relative value Indication (%)

(same as voltage and resistance)

Measurement range	Measured Value	±OF	Measurement Fault
All ranges	±***.***E+0	±100.000E+7	+100.000E+8

- In fact, the “+” sign for the mantissa is returned as a space (20H).
- When a measurement fault occurs during voltage measurement in the 10 V range, one more digit is increased (for the exponent) for the measured value string than in other modes.

  10 V normal measured value ±*.*****E+0
  At 10 V measurement fault ±*.*****E+E+10

- Unneeded zeroes to the left of the decimal point are replaced by blank space (20H).

  Example : _0001.36E-3 → ____1.36E-3
  -0007.51E+0 → -___7.51E+0
  ("_" indicates blanks space [20H].)
  The response will take the form of ±*.*****E+3 at voltages of -1000 V or less and 1000 V or greater.

nds supported by the

However the following differences result from the functional differences.

Comparator Tables

Up to 30 comparator settings can be saved with the Model 3560. The settings of each table can be changed directly by specifying the table number.
With the instrument, up to 126 measurement configurations (including comparator settings) can be saved (Panel Save). Settings for each configuration cannot be set directly. To recall saved configuration settings, specify the table (panel) number and execute Panel Load. A table number does not need to be specified for comparator settings.

Comparator Operations

Model 3560 judges resistance and voltage measurements together as PASS/FAIL.
The instrument judges resistance and voltage independently. Also, when the Comparator function is enabled (ON), auto-ranging is disabled (OFF).

Voltage Limiter

This instrument does not include a voltage limiter function (limiting open-terminal voltage to 20 mV). The instrument's open-terminal voltage is maximum 25 V (peak).
The voltage will drop to several mV within 100 µs of the measurement leads being connected to the target.
Note that a maximum 4 V peak will be applied when the test object resistance exceeds the range's measurement range by a significant margin.

Sense Line Disconnect Detection

The sense line disconnect detection function cannot be switched on/off with this instrument. Detection is always enabled.

Resistance Value Digits with FAST Sampling

When FAST sampling is enabled on Model 3560, the number of measured resistance digits is decreased from five to four.
With the instrument, measurement values are always five digits (31000 counts) regardless of sampling rate.

Voltage Measurement

Model 3560 provides 5 and 50 V ranges, with five-digit (50000 count) measurement values.
The instrument offers 10 V, 100 V, and 1000 V ranges and generates measured values that have one more digit (for a total of six digits) than the Model 3560.

Compatibility of each of the Model 3560 commands is described below with details of the functional differences with the instrument.
For the instrument, the command header is set to off when the instrument is turned on or reset (including *RST).

Message ([ ] = optional)	Data Contents ( ) = response data	Differences Model BT3564	Model 3560
Standard Commands			
∗IDN?	<Manufacturer's name>,<Model name>,0, <Software version>	Model name in response data: BT3564	Model name in response data: 3560
∗OPC ∗OPC?	——————— 1		
∗RST	———————	Initialization contents Measurement mode: ΩV mode (Resistance and voltage measurement) Header: OFF Power supply frequency: AUTO Zero-adjust value: Initialized to 0	Initialization contents Measurement mode: Resistance measurement mode Header: ON Power supply frequency: 50 Hz Zero-adjust value: Not initialized
∗SRE ∗SRE?	0 to 255 (NR1)		
∗STB?	0 to 255 (NR1)		
∗TRG	———————		
∗TST?	0 to 3 (NR1)	Response data bit2: -, bit1: EEP-ROM, bit0: RAM	Response data bit2: EEP-ROM, bit1: RAM, bit0: ROM
∗WAI			
Device-Specific Commands			
:MODe :MODe?	R/ RV		
:RRANge :RRANge?	0 to 3.1E+3 3E-3 to 3E+3		
:VRANge :VRANge?	-1000 to 1000 10E+0/100E+0/1E+3	Voltage range: -1000 to 1000 V 10 V/100 V/1000 V ranges are supported.	Voltage range: -50 to 50 Response: 5E+0/ 50E+0
:AUTorange :AUTorange?	1/ 0/ ON/ OFF ON/ OFF	Setting is not possible when the comparator is enabled (when the comparator is set to ON, auto-ranging is turned OFF).	Setting is possible even when the comparator is enabled (ON).
:ADJust?	0/ 1	Performs a measurement to generate the zero-adjustment value. Zero-adjustment range: 1000 counts	Applies the currently displayed value as the zero-adjustment value. Zero-adjustment range: 2400 counts
:SAMPle :SAMPle?	FAST/ MEDium/ SLOW		
:COMParator :COMParator?	0 to 30	Range of panel numbers: Turns Off when the panel number is 0, and turns On when the panel number is 1 to 30 Response: Returns 0 when the comparator is disabled (OFF), and 1 when enabled (ON)	Range of Comparator Numbers: 0 to 30 Response: Returns the response number

Message ([ ] = optional)	Data Contents ( ) = response data	Differences Model BT3564	Model 3560
:CSET:MODe :CSET:MODe?	R/ RV		
:CSET:NUMBer :CSET:NUMBer?	1 to 126	(function not available)	Specifies the comparator table number to set
:CSET:RPARameter :CSET:RPARameter?	<Upper threshold/ Lower threshold>	Setting range: 0 to 3.1000E+3 *Be sure to set the measurement range first. Otherwise, this setting will not be properly configured.	Setting range: 0 to 3.1000E+3
:CSET:RRANge :CSET:RRANge?	0 to 3E+0 3E-3 to 3E+3	Resistance range: 0 to 3.1E+3 3 mΩ ranges are supported.	Resistance range: 0 to 3.1E+3
:CSET:VPARameter :CSET:VPARameter?	<Upper threshold/ Lower threshold>	Setting range: 0 to 999.999 V * Negative setting values are invalid. *Be sure to set the measurement range first. Otherwise, this setting will not be properly configured.	Setting range: -5.0000 to 5.0000 (5 V range) -50.000 to 50.000 (50 V range)
:CSET:VRANge :CSET:VRANge?	-1000 to 1000 10E+0/100E+0/1E+3	Voltage range: -1000 to 1000 10 V, 100 V, and 1000 V ranges are supported.	Voltage range: -50 to 50 Response: 5E+0/ 50E+0
:CTMode :CTMode?	AUTo/ MANual		
:MEASure:BATTery?	<Measured resistance, Measured voltage, Judgment result> FAIL/ PASS/ OFF/ NG	Measured resistance values consist of five digits with FAST sampling Measured voltage values: 1 digit for sign + 6 digits for value * Numerical values do not include a decimal point.	Measured resistance values consist of four digits with FAST sampling Measured voltage values: 1 digit for sign + 5 digits for value * Numerical values do not include a decimal point.
:MEASure:RESistance?	<Measured resistance, Judgment result> FAIL/ PASS/ OFF/ NG (ΩV) HI/ IN/ LO/ OFF/ NG (Ω)	Measured resistance values consist of five digits with FAST sampling * Numerical values do not include a decimal point.	Measured resistance values consist of four digits with FAST sampling * Numerical values do not include a decimal point.
:MEASure:VOLTage?	<Measured voltage, Judgment result> FAIL/ PASS/ OFF/ NG	Response: Mark: one character + six numerals * Numerical values do not include a decimal point.	Response: * Numerical values do not include a decimal point.
:FREQuency :FREQuency?	AUTO/50/60	Setting range: AUTO/50/60 Power supply frequency setting: Support for AUTO detection	Setting range: 50/60
:LOCK:KEY :LOCK:KEY?	ON/OFF		
:HEADer :HEADer?	ON/OFF		
:LOCK:EXTernal :LOCK:EXTernal?	ON/OFF		
:CSET:BEEPer :CSET:BEEPer?	OFF/ PASS/ FAIL (ΩV) OFF/ IN/ HL (Ω)		
:HOLD :HOLD?	ON/ OFF		

Message ([ ] = optional)	Data Contents ( ) = response data	Differences Model BT3564	Model 3560
:LIMit :LIMit?	ON/ OFF	(function not available)	Open terminal voltage is limited to 20 mV
:SENSecheck :SENSecheck?	ON/ OFF	(function not available)	Sense line disconnect detection is provided
:ZERoclear			

Measurement Value Formats (compatible command with Model 3560)

For the commands that acquire measurement values (**:MEASure:BATTery?**, **:MEASure:RESistance?** and **:MEASure:VOLTage?**), the response formats are as follows.

Measured resistance value

Measurement Range	Measured Value
3 mΩ	*.****E-3
30 mΩ	**.***E-3
300 mΩ	***.**E-3
3 Ω	*.****E+0
30 Ω	**.***E+0
300 Ω	***.**E+0
3000 Ω	*.****E+3
± OF	1.0000E+8
Measurement Fault	1.0000E+9

Measured voltage value

Measurement Range	Measured Value
10 V	±*.*****E+0
100 V	±**.****E+0
1000 V	±***.***E+0
± OF	±1.0000E+8
Measurement Fault	1.0000E+9

- The positive sign for measured voltage values is returned as a space character.
- The number of displayed digits is unaffected by sampling rate.
- The response will take the form of ±*.*****E+3 at voltages of -1000 V or less and 1000 V or greater.

Reference: Model 3560 Measurement Value Formats

Measured resistance value

Measurement Range	FAST	MEDIUM/ SLOW
30 mΩ	***.*E-3	***.**E-3
300 mΩ	***.*E-3	***.**E-3
3 Ω	*.***E+0	*.****E+0
30 Ω	**.**E+0	**.***E+0
300 Ω	***.*E+0	***.**E+0
3000 Ω	*.***E+3	*.****E+3
± OF	1.0000E+8	1.0000E+8
Measurement Fault	1.0000E+9	1.0000E+9

Measured voltage value

Measurement Range	All sampling rates
5 V	±*.****E+0
50 V	±**.***E+0
± OF	±1.0000E+8
Measurement Fault	1.0000E+9

8.7 Basic Data Importing Methods

Flexible data importing is available depending on the application.

Free-Run Data Importing

Initial Setup
:INITiate:CONTinuous ON (enable continuous measurement)
:TRIGger:SOURce IMM (internal triggering)

Importing
:FETCh?
Imports the most recent measurement value

Importing by Host Triggering

Initial Setup
:INITiate:CONTinuous OFF (disable continuous measurement)
:TRIGger:SOURce IMM (internal triggering)

Importing
:READ?
A trigger occurs, and a measurement is taken and the result is transferred.

Importing Data by TRIG Key or $\overline{\text{TRIG}}$ Terminal

Initial Setup
:INITiate:CONTinuous OFF (disable continuous measurement)
:TRIGger:SOURce EXT (external triggering)

Importing
:READ?
When triggered by the **TRIG** key or TRIG terminal, a measurement is taken and the result is transferred.

8.8 Sample Programs

To be prepared in Visual Studio® 2017

Creation Procedure (Visual Basic® 2017)

This section describes the procedure for using Visual Basic® 2017 to create programs.

NOTE Depending on the environment of the PC and Visual Basic® 2017, the procedure may differ slightly from the one described here. For a detailed explanation on how to use Visual Basic® 2017, refer to the instruction manual or Help of Visual Basic® 2017.

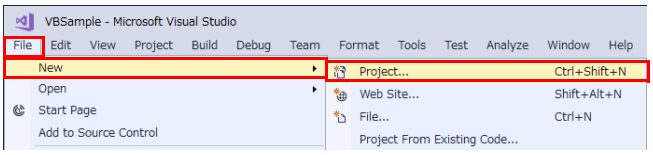

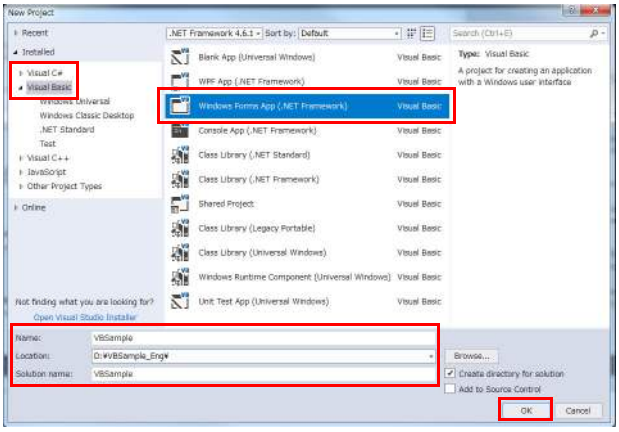

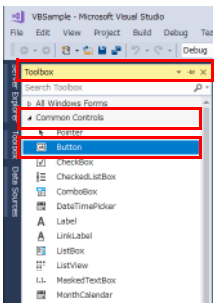

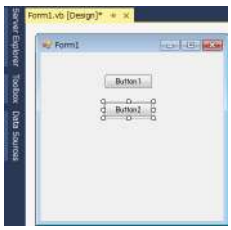

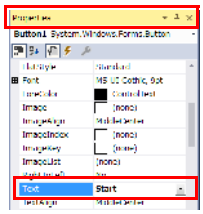

1 Launch Visual Studio® 2017.
Choose [**File**]-[**New**]-[**Project**].

2 Choose [**Visual C#**] or [**Visual Basic**]-[**Windows Forms APP (.NET Framework)**].

3 Enter a name, location, and solution name and click [**OK**].

4 Place the buttons.

1. Click [**Toolbox**]-[**Common Controls**]-[**Button**].
2. Drag and place the [**Button**] control on the form design screen.
3. Change the [**Text**] field on the [**Properties**] window to [**Start**].
4. Repeat Steps 1 through 3 to create a button for exiting the application.

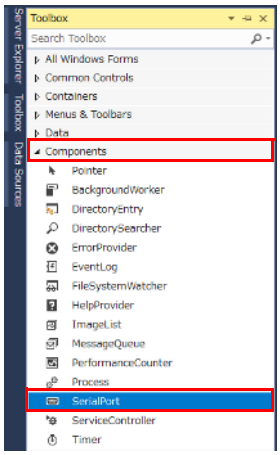

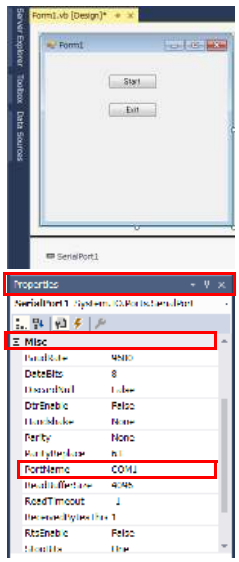

5 Place the serial communications component.

1. Click [**Toolbox**]-[**Components**]-[**SerialPort**].
2. Drag the [**SerialPort**] component onto the form design screen.
3. Configure the settings under [**Serial Port**]-[**Properties**]-[**Misc**].
4. Check [**Control Panels**]-[**Hardware and Sound**]-[**Device Manager**]-[**Ports**] and change [**Port Name**] to the name of the port being used.

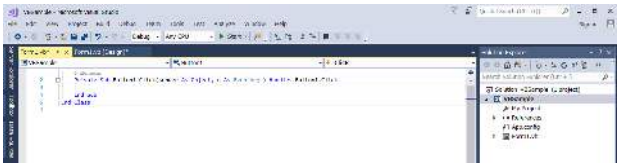

6 Add code.

Double click the [**Start**] control that was placed to display the code editor.

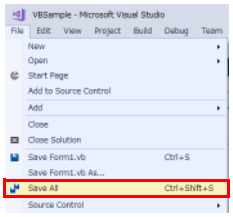

7 Choose [**File**]-[**Save All**] and exit Visual Studio® 2017.

Sample Programs (Visual Basic® 2017)

Shown below is a sample program which uses Visual Basic® 2017 to enact RS-232C communication, set the measurement conditions, read measurement results and then save them to file. The sample program will be written in the following manner.
Button created to begin measurement .....Start
Button created to close application ..... Exit
When the [Begin Measurement] is pressed, takes 10 measurements and writes the measurement values to a [data.csv] file.
When the [Quit] button is pressed the program closes.
The following program is written entirely in [Form1] code.

```
Imports System
Imports System.IO
Imports System.IO.Ports

Public Class Form1
   'Perform process when Button1 is pressed
   Private Sub Button1_Click(sender As Object, e As EventArgs) Handles Button1.Click
      Dim recvstr As String
      Dim i As Integer
      Try
         Button1.Enabled = False                    'Disable buttons during communication......(a)
         Button2.Enabled = False
         'Communication port setting.....................(b)
         SerialPort1.PortName = "COM1"
         SerialPort1.BaudRate = 9600
         SerialPort1.DataBits = 8
         SerialPort1.Parity = Parity.None
         SerialPort1.StopBits = StopBits.One
         SerialPort1.NewLine = vbCrLf               'Terminator setting.....................(c)
         SerialPort1.ReadTimeout = 2000             '2 seconds time out....................(d)
         SerialPort1.Open()                         'Open a port
         SendSetting(SerialPort1)                   'Instrument settings
         FileOpen(1, "data.csv", OpenMode.Output)   'Create text file to be saved.........(e)
         For i = 1 To 10
            SerialPort1.WriteLine(":FETCH?")        'Begin measurement and read measurement results Command....(f)
            recvstr = SerialPort1.ReadLine()        'Read measurement results
            WriteLine(1, recvstr)                   'Write to file
         Next
         FileClose(1)                               'Close file
         SerialPort1.Close()                        'Close port
         Button1.Enabled = True
         Button2.Enabled = True
      Catch ex As Exception
         MessageBox.Show(ex.Message, "Error", MessageBoxButtons.OK, MessageBoxIcon.Error)
      End Try

   End Sub

   'Set measurement conditions
   Private Sub SendSetting(ByVal sp As SerialPort)
      Try
         sp.WriteLine(":TRIG:SOUR IMM"              'Select internal triggering
         sp.WriteLine(":INIT:CONT ON")              'Continuous measurement ON
      Catch ex As Exception
         MessageBox.Show(ex.Message, "Error", MessageBoxButtons.OK, MessageBoxIcon.Error)
      End Try
   End Sub
```

```
  'Close program when Button2 is pressed
  Private Sub Button2_Click(sender As Object, e As EventArgs) Handles Button2.Click
    Me.Dispose()
  End Sub
End Class
```

(a) This makes it so that during communication the [Begin Measurement] and [Close] buttons cannot be pressed.
(b) Matches communication conditions and the computer usage conditions.
The port to be used on the computer: 1
Transmission speed: 9600 bps
Parity: none
Data length: 8 bit
Stop bit: 1 bit
(c) Sets CR + LF as the terminator indicating the end of the sending and receiving character string.
(d) Sets the reading operation time to 2 seconds.
(e) Opens the “data.csv” file. However, if a file with this name already exists, the previous “data.csv” will be deleted and a new file created.
(f) Sends the command to perform one measurement and return that measurement result to the computer.

Sample Programs (Visual C#® 2017)

A similar example to Visual Basic® 2017 in Visual C#® 2017 follows:

```
using System;
using System.Collections.Generic;

using System.Data;
using System.Drawing;
using System.Linq;
using System.Text;
using System.Threading.Tasks;
using System.Windows.Forms;
using System.IO;
using System.IO.Ports;

namespace CSSample
{
    public partial class Form1 : Form
    {
        public Form1()
        {
            InitializeComponent();
        }

        //Perform process when Button1 is pressed
        private void button1_Click(object sender, EventArgs e)
        {
            StreamWriter sw;
            string recvstr;
            int i;

            try
            {
                button1.Enabled = false;                    //Disable buttons during communication........(a)
                button2.Enabled = false;
                //Communication port setting.......................(b)
                SerialPort1.PortName = "COM1";
                SerialPort1.BaudRate = 9600;
                SerialPort1.DataBits = 8;
                SerialPort1.Parity = Parity.None;
                SerialPort1.StopBits = StopBits.One;
                SerialPort1.NewLine = "\r\n";               //Terminator setting..........................(c)
                SerialPort1.ReadTimeout = 2000;             //2 seconds time out.........................(d)
                SerialPort1.Open();                         //Open a port
                SendSetting();                              //Instrument settings
                sw = new StreamWriter(@"data.csv");         //Create text file to be saved.............(e)
                for (i = 0; i < 10; i++)
                {
```

```
                SerialPort1.WriteLine(":FETCH?");        //Begin measurement and read measurement results Comman....(f)
                recvstr = SerialPort1.ReadLine();        //Read measurement results
                sw.WriteLine(recvstr);                   //Write to file
            }
            sw.Close();                                  //Close file
            SerialPort1.Close();                         //Close port
            button1.Enabled = true;
            button2.Enabled = true;
        }
        catch (Exception ex)
        {
            MessageBox.Show(ex.Message);
        }
    }

    //Set measurement conditions
    private void SendSetting()
    {
        try
        {
            SerialPort1.WriteLine(":TRIG:SOUR IMM");//Select internal triggering
            SerialPort1.WriteLine(":INIT:CONT ON");  //Continuous measurement ON
        }
        catch (Exception ex)
        {
            MessageBox.Show(ex.Message);
        }
    }

    //Close program when Button2 is pressed
    private void button2_Click(object sender, EventArgs e)
    {
        Dispose();
    }
  }
}
```

Specifications Chapter 9

9.1 General Specifications

Operating environment	Indoors, pollution degree 2, altitude up to 2000 m (6562 ft.)
Operating temperature and humidity	0°C to 40°C (32°F to 104°F), 80% RH or less (no condensation)
Storage temperature and humidity	-10°C to 50°C (14°F to 122°F), 80% RH or less (no condensation)
Applicable standards	Safety EN61010 EMC EN61326 Class A
Power source	Commercial power Rated power supply voltage: 100 V AC to 240 V AC (Voltage fluctuations of ±10% from the rated power supply voltage are taken into account.) Rated power supply frequency: 50 Hz/60 Hz Anticipated transient overvoltage: 2500 V Power consumption: 30 VA
Interfaces	RS-232C, GP-IB
Dimensions	Approx. 215W X 80H X 329D mm (8.46”W X 3.15”H X 12.95”D) (excluding protruding parts)
Mass	Approx. 2.6 kg (91.7 oz.)
Product warranty period	3 years Connector, cable, etc: Not covered by warranty
Accessories and options	(⇒ p.2)

9.2 Basic Specifications

Measurement items	Measurement items: resistance and voltage Resistance measurement method: AC four-terminal method Resistance measurement current frequency: 1 kHz ±0.2 Hz
Measurable range	Resistance measurement range: 0 Ω to 3.1 kΩ (minimum resolution 0.1 μΩ) Voltage measurement range: 0 V DC to ±999.999 V DC (minimum resolution 10 μV) Voltage displaying range: ±1100.00 V
Measurement range	Resistance measurement: 3 mΩ/30 mΩ/300 mΩ/3 Ω/30 Ω/300 Ω/3000 Ω, 7 ranges Voltage measurement: 10 V/100 V/1000 V, 3 ranges Auto-range function: ON/OFF (applies to both resistance and voltage measurement.)
DC input resistance	5 MΩ
Open-terminal voltage	25 V peak
Measurement modes	ΩV mode: Measures resistance and voltage simultaneously Ω mode: Measures resistance only V mode: Measures voltage only
Maximum input voltage	±1000 V DC
Maximum rated voltage to earth	1000 V DC Anticipated transient overvoltage: 1500 V
Response time	Measurement response time: Approximately 700 ms The time from the moment the probes contact the test object in the open state until the signal stabilizes within the measurement accuracy in the internal measurement circuit (analog response time)
Sampling time	Sampling rate: FAST/MEDIUM/SLOW, 3 levels

Sampling	FAST	MEDIUM	SLOW
ΩV (50 Hz) (60 Hz)	28 ms	88 ms 74 ms	384 ms 359 ms
Ω (50 Hz) (60 Hz)	12 ms	42 ms 35 ms	276 ms 253 ms
V (50Hz) (60Hz)	16 ms	46 ms 39 ms	281 ms 257 ms

Tolerance for SLOW sampling is ±5 ms, and ±1 ms for other sampling rates
Values within parentheses are line frequency settings

Total measurement time	Overall time required for measurement: Response time + sampling time

Measured value display	Range-over indicator The display will show “OF” or “-OF” to indicate a range-over state under the following conditions: • If the measured value (including zero-adjustment calculations) falls outside the display count range • If the measured value exceeds the A/D converter’s input range • If the measured value exceeds the measurement circuit amp’s input range (if the impedance value exceeds the range) Measurement fault detection (contact check) Detected information: SOURCE HIGH-LOW connection faults SENSE HIGH-LOW connection faults Error displays: “- - - - -”

9.3 Accuracy

Accuracy

We define measurement tolerances in terms of f.s. (full scale), rdg. (reading) and dgt. (digit) values, with the following meanings:

f.s. (maximum display value)
The maximum displayable value. This is usually the name of the currently selected range.

rdg. (reading or displayed value)
The value currently being measured and indicated on the measuring instrument.

dgt. (resolution)
The smallest displayable unit on a digital measuring instrument, i.e., the input value that causes the digital display to show a "1" as the least-significant digit.

Guaranteed accuracy conditions

Guaranteed accuracy period	1 year
Guaranteed accuracy period after adjustment made by Hioki	1 year
Guaranteed accuracy for temperature and humidity	23°C ± 5°C (73°F ± 9°F), 80% RH or less (no condensation)
Warm-up time	At least 30 minutes, after zero adjustment
Average function	ON, 4 times
Measurement state	Measurement taken in the same measuring environment as was in place when zero adjustment was performed, including identical probe profile and placement. Probe profile must not be changed during measurement.
Self calibration	Except when using SLOW sampling, self-calibration should be executed after warm-up. Ambient temperature after self-calibration should be maintained within ± 2°C.

Resistance-measuring accuracy

Range	3 mΩ	30 mΩ	300 mΩ	3 Ω	30 Ω	300 Ω	3000 Ω
Maximum displayed values	3.1000 mΩ	31.000 mΩ	310.00 mΩ	3.1000 Ω	31.000 Ω	310.00 Ω	3100.0 Ω
Resolution	0.1 μΩ	1 μΩ	10 μΩ	100 μΩ	1 mΩ	10 mΩ	100 mΩ
Measured current*1	100 mA	100 mA	10 mA	1 mA	100 μA	10 μA	10 μA
Measured current frequency	1 kHz±0.2 Hz						
Accuracy*2, *3	±0.5% rdg. ±5 dgt. ±0.5% rdg. ±10 dgt. (3 mΩ range)						
Temperature coefficient	(±0.05% rdg. ±0.5 dgt.)/°C (±0.05% rdg. ±1 dgt.)/°C (3 mΩ range)						

*1: Measurement current error within ±10%
*2: Range other than the 3 mΩ range: Add ±3 dgt. in FAST mode, add ±2 dgt. in MEDIUM mode.
3 mΩ range: Add ±10 dgt. in FAST mode, add ±5 dgt. in MEDIUM mode.
*3: When the averaging function is off
Range other than the 3 mΩ range: Add ±8 dgt. in FAST mode, ±4 dgt. in MEDIUM mode, or ±2 dgt. in SLOW mode.
3 mΩ range: Add ±20 dgt. in FAST mode, ±10 dgt. in MEDIUM mode, or ±5 dgt. in SLOW mode.

Voltage-measuring accuracy

Range	10 V	100 V	1000 V
Maximum displayed values	±9.99999 V	±99.9999 V	±1100.00 V
Resolution	10 μV	100 μV	1 mV (0.000 V to 999.999 V) 10 mV (1000.00 V to 1100.00 V)
Accuracy*4, *5	±0.01% rdg. ±0.03 mV	±0.01% rdg. ±0.3 mV	±0.01% rdg. ±3 mV Guaranteed accuracy period: 0.000 V to ±999.999 V
Temperature coefficient	(±0.001% rdg.±0.3 dgt.)/°C		

*4: Add ±4 dgt. in FAST mode or ±2 dgt. in MEDIUM mode.
*5: When the averaging function is off
Add ±8 dgt. in FAST mode, ±4 dgt. in MEDIUM mode, or ±2 dgt. in SLOW mode.

Effect of radiated radio-frequency electromagnetic field	Resistance measurement: ±10% rdg. ±8000 dgt. at 10 V/m Voltage measurement: ±0.01% rdg. ±100 dgt. at 10 V/m
Effect of conducted radio-frequency electromagnetic field	Resistance measurement: ±0.5% rdg. ±1000 dgt. at 3 V

9.4 Functions

Zero-adjustment function	Enable or cancel zero-adjustment Zero-adjustment setting: ON/OFF Cancel zero-adjustment: Turn off the zero-adjustment to clear all zero-adjustment data. Zero-adjustment range Resistance measurement: -1000 to 1000 counts Voltage measurement: -1000 to 1000 counts
Self calibration	Calibration mode: AUTO/MANUAL AUTO: executes automatically once every 30 minutes MANUAL: executes manually by EXT I/O signal or remote command * When sampling is set to SLOW, the instrument performs self-calibration before each measurement.
Trigger function	Trigger source: Internal/External
Delay function	Delay setting: ON/OFF Delay time: 0 to 9.999 sec
Averaging function	Averaging setting: ON/OFF No. of samples to average: 2 to 16 times
Comparator function	Comparator function setting: ON/OFF Comparator setting Comparator mode: HIGH, LOW/REF, % Upper and lower limit value: 0 to 99999 (Resistance)/0 to 999999 (Voltage) Reference value: 0 to 99999 (Resistance)/0 to 999999 (Voltage) %: 0.000% to 99.999% (percentage range setting applies to both positive and negative values) Comparator judgment beeper mode: OFF/HIGH, LOW/IN/ALL Operating mode: AUTO/MANUAL * Measurement value or statistical 3σ (population standard deviation × 3) can be set as upper/lower limit or reference values. Decision Judgment result: Hi/IN/Lo (resistance and voltage judged independently) PASS/FAIL judgement Calculates the logical AND of resistance and voltage judgment results and outputs a PASS/FAIL judgment (EXT I/O output). Measurement fault value judgments: OF; Hi judgment -OF; Lo judgment Measurement fault; Not judged (no judgment result)
Statistical calculation function	Statistical calculation setting: ON/OFF/Clear Auto-clear after printing statistical data Calculations: Total data counts, valid data counts, maximum, minimum, average, standard deviation, population standard deviation and process capability indices (Cp and CpK) Calculations trigger: Statistical calculation of measured values initiated by EXT I/O signals, key or remote command

Measurement memory and batch download functions	Measurement memory setting: ON/OFF/Clear Memory trigger: Up to 400 measurement values can be stored in internal memory by EXT I/O signals, key or remote command. Stored measurement values can be batch downloaded by remote command. * Data stored in memory cannot be displayed on the instrument. Measurement value output function: Outputs measured values via the RS-232C interface upon triggering
Key-lock function	Key-lock setting: ON/OFF Key operations are disabled when ON.
Power supply frequency setting function	Operating power supply frequency setting: AUTO (automatic selection of 50 Hz/60 Hz)/50 Hz/60 Hz
Panel save function	No. of panel to save: 126 Saved settings: Functions, resistance measurement range, voltage measurement range, auto-ranging setting, zero-adjust on/off setting and value, sampling rate, trigger source, delay setting, averaging setting, comparator setting, statistical calculation setting, display toggle, key-lock setting * Measurement conditions can be saved and loaded by specifying a panel number.
Reset	Reset method: Reset/System reset * System Reset also initializes the panel save data
Display device	LED

9.5 External Interfaces

Communications interfaces	RS-232C/Printer/GP-IB
RS-232C	Communications settings: Data length (8 bits), stop bit (1 bit), parity (none) Baud rate: 9600 bps/19200 bps/38400 bps Flow control: none
Printer	Output to printer via RS-232C (multi-use) Supporting printer: Serial printer that can print plain text Communications settings: Data length (8 bits), stop bit (1 bit), parity (none) Baud rate: 9600 bps
GP-IB	Applicable GP-IB Standards: IEEE488.2 Address: 0 to 30 Delimiter: LF/CR+LF
EXT I/O	Connector: 37-pin D-sub female with #4-40 screws Mating Connectors: DC-37P-ULR (solder type) DCSP-JB37PR (insulation displacement weld type) Japan Aviation Electronics Industry Ltd. product or equivalent Input: Optocoupler-isolated, no-voltage contacts (dielectric strength of 30 V DC) Output: Optocoupler-isolated, Nch open-drain output, 30 V DC, 50 mA max. Input signals: Measurement trigger, print, zero-adjustment, calibration, manual comparator, panel load (7 bits) Service power supply output: Voltage; 4.5 to 5 V Crrent; 100 mA max. Isolation; Floating from protective ground potential and measurement circuit Isolation rating; Input-to-ground voltage of 50 V DC, 30 V rms AC, 42.4 Vp AC or less Pinout: (⇒ p.76)
Analog output	Output value: Measured resistance value (display value) Output voltage: 0 V DC (equivalent to 0 counts) to 3.1 V (equivalent to 31000 counts) Output resistance: 1 kΩ Conversion method: D/A converter No. of bits: 12 bits Output accuracy: Resistance measurement accuracy ±0.2% f.s. (temperature coefficient ±0.02% f.s./°C) Conditions of accuracy guarantee:Temperature and humidity range 23 ± 5°C (73 ± 9°F), 80% RH or less (non-condensating) Warm-up time of at least 30 minutes Response time: Resistance measurement response time + sampling time + 1 ms

Maintenance and Service Chapter 10

10.1 Troubleshooting

- If damage is suspected, check the "Troubleshooting" section before contacting your authorized Hioki distributor or reseller.
- The fuse is housed in the power unit of the instrument. If the power does not turn on, the fuse may be blown. If this occurs, a replacement or repair cannot be performed by customers. Please contact your authorized Hioki distributor or reseller.
- If no measurement value is displayed even when the probes are shorted together, an internal fuse may have blown.
  If the fuse blows, do not attempt to replace the fuse or repair the instrument: contact your authorized Hioki distributor or reseller.
- Pack the instrument so that it will not sustain damage during shipping, and include a description of existing damage. We cannot accept responsibility for damage incurred during shipping.

⚠WARNING Never modify, disassemble or repair the instrument. Failure to observe these precautions may result in fire, electric shock, or injury.

Before returning for repair.

Symptom	Check Items	Countermeasure
The display does not appear when you turn the power on (main power switch or power switch).	Is the power cord disconnected?	Reconnect the power cord.
Keys do not operate.	Is the unit in the key-locked state?	Disable the key-lock state. **See** "4.6 Key-Lock Function"(⇒ p.66).
	Is the instrument being remotely controlled externally using GP-IB?	Set GP-IB to local.
	Is the instrument being remotely controlled externally using RS-232C?	Set RS-232C to local.
An error is displayed.		**See** "10.3 Error Indication"(⇒ p.175).
Operation is abnormal.		External electrical noise may occasionally cause malfunctions. If operation seems abnormal, try executing a Reset. **See** "4.12 Reset Function"(⇒ p.72).

Symptom	Check Items	Countermeasure
Measured value is unstable.	Are you using a two-terminal connection (is one probe pin in contact with each of the positive and negative electrodes)?	When using a two-terminal connection, the pins' contact resistance may affect the resistance value, resulting in unstable readings. Use a four-terminal connection (including contact pins). **See** "Appendix 1 Precautions for Making Custom Test Leads"(⇒ p.A1)
	Are there any metallic objects near the probes (near the battery being measured)?	When there is a metallic object near the battery being measured and probes, measured values may fluctuate as a result of induction caused by eddy currents. • Make measurements as far away from metallic objects as possible. • Twist the cable and minimize the area of the fork. **See** "Appendix 1 Precautions for Making Custom Test Leads"(⇒ p.A1)
	Is there signal noise?	• Twist cables and minimize the area of the fork (loops act as antennas and pick up noise). • Shield and ground cables. **See** "Appendix 1 Precautions for Making Custom Test Leads"(⇒ p.A1)
	Are you using multiple Model BT3564 instruments to make simultaneous measurements?	Interference between measurement signals may cause measured values to vary. • Take care to keep probes' forked loops from overlapping (at the battery being measured). **See** "Appendix 1 Precautions for Making Custom Test Leads"(⇒ p.A1) • Avoid stacking the instruments on top of each other.
	Are you taking measurements right in front of the instruments?	Induced signals from the instruments' circuits can be picked up as noise, causing measured values to fluctuate. Take measurements at least 20 cm away from the instruments.

10.2 Cleaning

To clean the instrument, wipe it gently with a soft cloth moistened with water or mild detergent. Never use solvents such as benzene, alcohol, acetone, ether, ketones, thinners or gasoline, as they can deform and discolor the case.

10.3 Error Indication

Display		Description
Err02	Zero-Adjust Range Error	The measured resistance value or measured voltage value prior to zero adjustment exceed 1000 dgt.
Err10	Execution Error	The data portion of a remote command is invalid.
Err11	Command Error	The command portion of a remote command is invalid.
Err90	ROM Error	An internal program error occurred. Repair is required.
Err91	RAM Error	An internal RAM error occurred. Repair is required.
Err92	EEPROM (Adjustment Data) Error	Adjustment data is corrupted. Repair is required.
Err95	A/D Communications Error	The A/D converter is damaged. Repair is required.
- - - - -	This indicates a measurement fault. It appears in cases of a disconnected test lead, poor probe contact or when the test object's measured value is far above the measurement range. The measurement fault signal is output from the ERR terminal of the EXT I/O connector. The following causes should be considered: • A test lead may not be connected to the test object • Test object resistance may be too very large for the measurement range Example: Measuring 20 Ω with the 300 mΩ range • Any of the SOURCE-H, SOURCE-L, SENSE-H or SENSE-L leads may be disconnected or poorly connected • The probe may have a high contact resistance **See** " Measurement Fault Detection"(⇒ p.36) • The contact failure circuit protection fuse may have blown due to test lead damage, excessive wear, or impurities.	

Appendix

Appendix 1 Precautions for Making Custom Test Leads

Bear the following in mind when making custom test leads.

- Be sure to twist together the SOURCE-H and L leads, and the SENSE-H and L leads. Also, connect the shields of all leads to the ground.

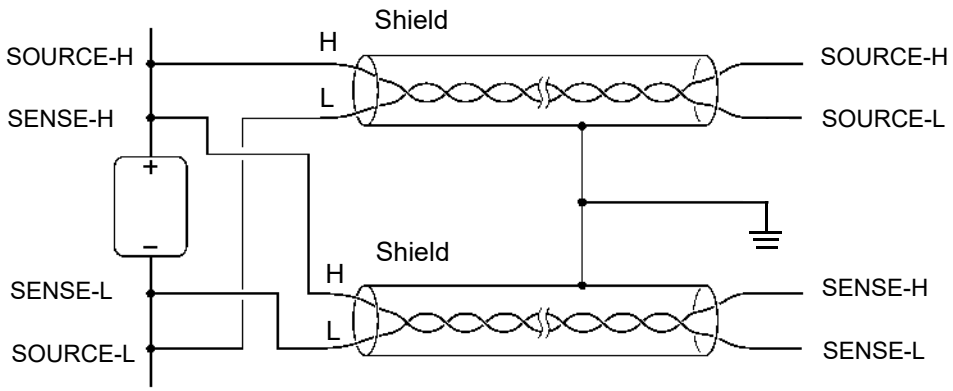

- The four-terminal design requires that all four terminals be used for measurement. Attempting to measure with two terminals (the two lines in the middle) may result in unstable or inconsistent measurements due to the effects of test lead contact resistance.

Wrong Connection

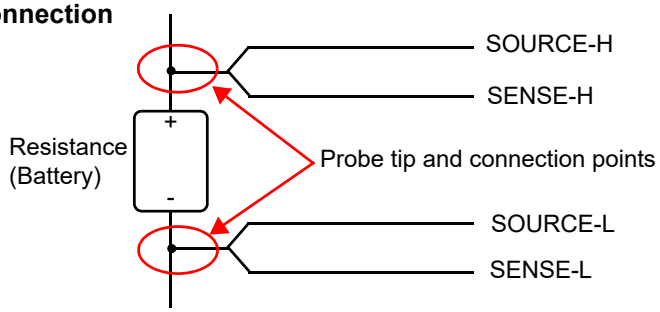

- When connecting to a test object, connect SOURCE-H and SOURCE-L toward the outside, and SENSE-H and SENSE-L toward the inside.

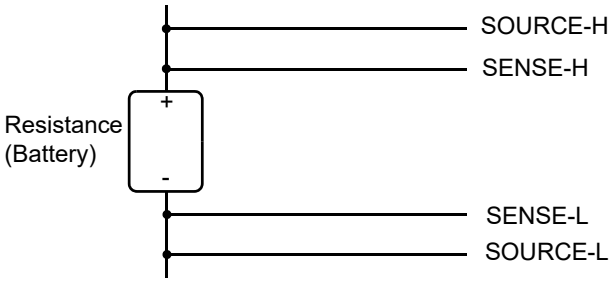

- Do not allow the test leads near metal surfaces. In particular, the lead portions that are not twisted together must be kept away from conductors to avoid unstable measurements resulting from the effects of induced current.
  See "Appendix 6 Effect of Eddy Currents"(⇒ p.A8).

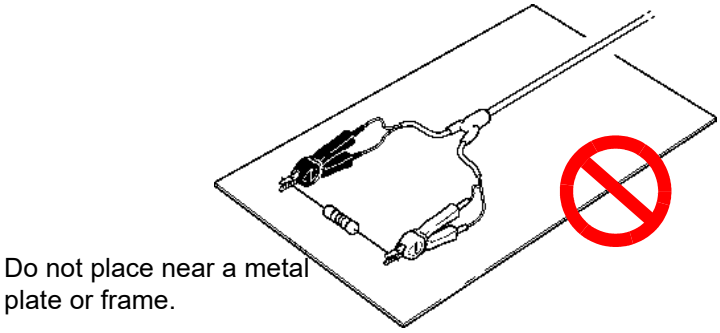

- Observe the precautions illustrated in the following diagram concerning the shape and placement of measurement leads. Eddy currents and outside induced noise caused by nearby metallic objects can introduce an error component or variation into measured values, degrading repeatability. (The impact of these phenomena can be reduced as described below.)

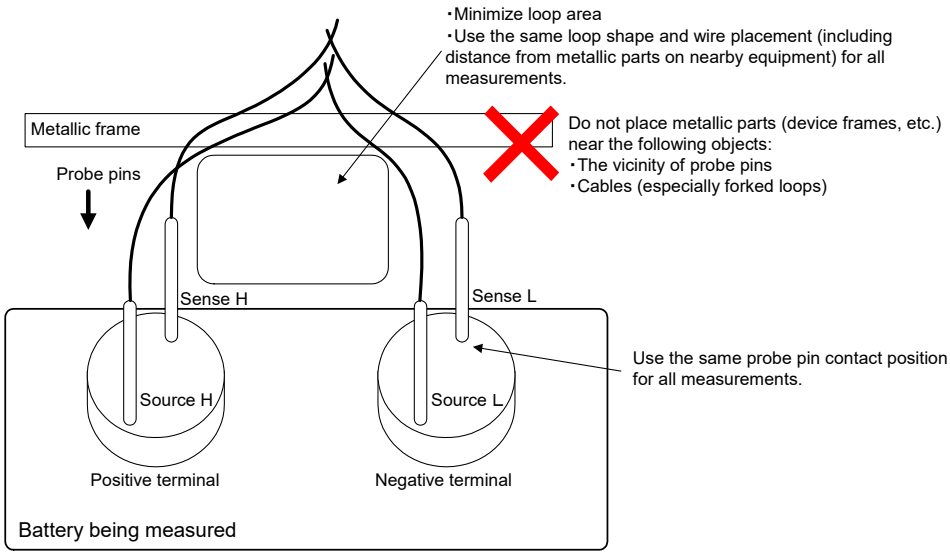

- Use the minimum necessary wire length (5 m or less). Longer wire runs are more susceptible to noise and may result in unstable measured values. The sum of the round-trip wiring resistance and measurement lead contact resistance should be 20 Ω (for 3 mΩ and 30 mΩ ranges, 2 Ω) or less.
- Perform zero-adjustment prior to starting measurement. Make a zero-adjustment jig and perform the process using the same configuration (probe shape and placement) as will be used for actual measurement. Nearby metallic objects may introduce an error component (offset) to measured values due to the effects of eddy currents and other phenomena. This error component can be eliminated by performing zero-adjustment after measuring the ideal zero resistance state (using the zero-adjustment jig) for the same probe shape and placement that will be used to perform actual measurement. This is particularly important when using the 3 mΩ and 30 mΩ ranges, where the effects of eddy currents are more pronounced.
- Avoid the use of metal plates (short bars) as a zero-adjustment jig as the plate's resistance value will introduce an error component.

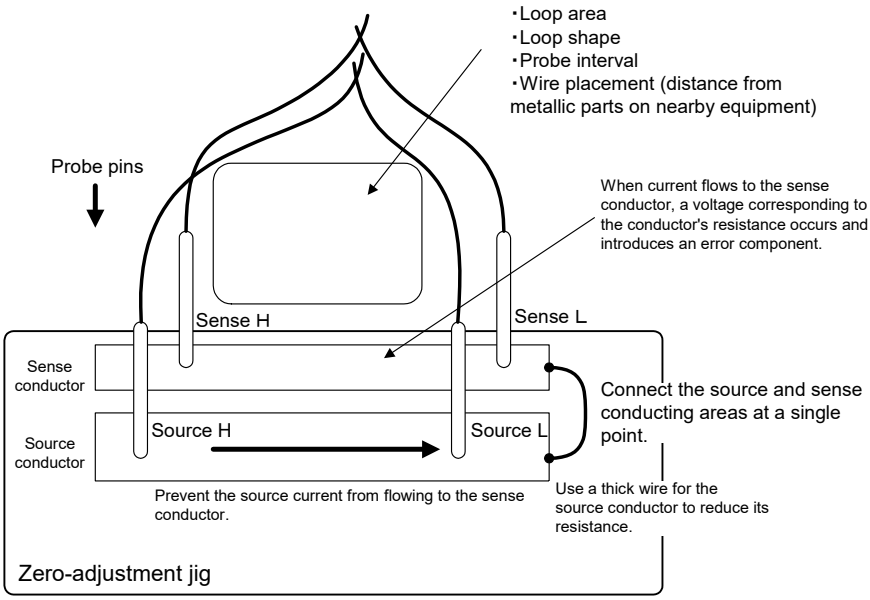

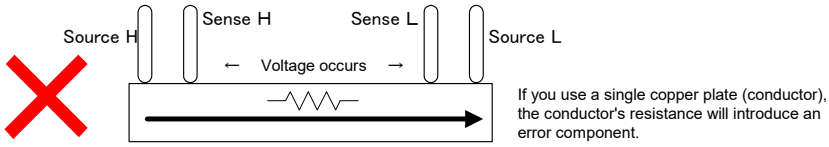

⚠WARNING

- Do not touch the metallic tip of probes after measuring high-voltage batteries. Doing so may result in electrical shock since internal instrument components could retain a charge under those conditions. (Internal discharge time: Approx. 20 sec.)
- To avoid electric shock, use a cable whose withstand voltage is sufficiently high relative to the battery voltage being measured.

NOTE

- When separating the tips of the optional measurement leads, take care that the SOURCE-H, SENSE-H, and SENSE-L shield wires do not come into contact with the core wires. To avoid a measurement error when the instrument detects a measurement anomaly, exercise care with regard to the magnitude of the wiring resistance. It is recommended to use a stranded cable with a conductor thickness of AWG 22 (0.3SQ) or greater.
- To avoid short-circuit accidents, connect the probe's banana terminals to the instrument before connecting the probes to the battery.

.

Appendix 2 AC Four-terminal Method

The instrument uses the AC four-terminal method, so that resistance measurement can be carried out with the resistance of the leads and the contact resistance between the leads and the object to be measured canceled out. The following figure shows the principle of the AC four-terminal measurement method.

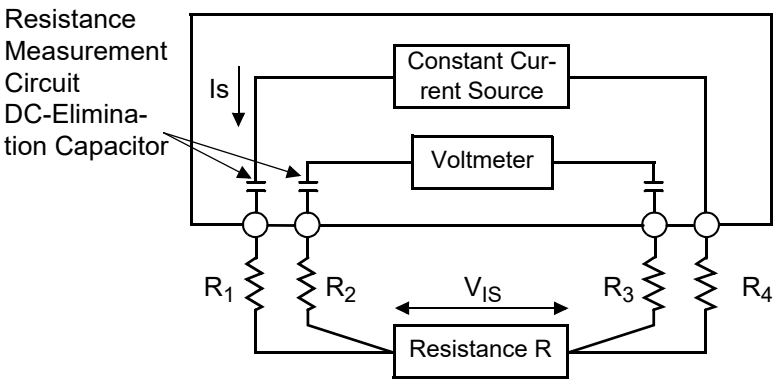

Values R_1 to R_4 are the resistances of the test leads plus contact resistances.

An AC current (I_s) is supplied from the SOURCE terminals of the instrument across the tested battery. The voltage drop across the internal impedance of the battery (V_{IS}) is measured by the SENSE terminals. At this point, since the SENSE terminals are connected to an internal voltmeter with a high impedance, almost no current flows through the resistances R_2 and R_3 which represent the lead resistances and contact resistances. As a result, there is almost no voltage drop across the resistances R_2 and R_3. Thus the voltage drop due to the lead resistances and contact resistances is very small, and these can be canceled out. In the instrument, a synchronized wave detection system is used, whereby the internal impedance is separated into resistance and reactance, and the resistive component only displayed.

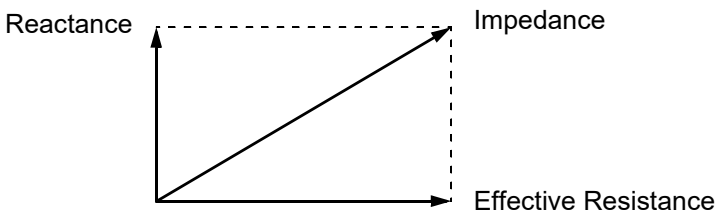

If the lead resistance, the contact resistance between measured object and lead, or the contact resistance between the lead and the instrument increases, the instrument can no longer supply normal current to the measured object, resulting in an abnormal measurement status indicated by "- - - - -" within the measured resistance field. For more information on abnormal measurements, see Section " Measurement Fault Detection" (⇒ p.36).

Appendix 3 Measurement values when using four-terminal measurement (Differences in measurement values due to measurement leads used)

Depending on the subject of measurement, such as a lead-acid battery, measurement values may vary due to the measurement lead used. Since these differences in measurement values are due to the shapes and dimensions of the probes used in four-terminal measurement, measurement values taken using any probe represent the true values for that probe only.
When judging battery wear using changes in resistance values with time, be sure to use measurement leads having the same dimensions.

Explanation

Differences in measurement values are physical phenomena resulting from differences in the distances (dimensions) between current-impression pins and voltage-measurement pins. The greater the battery terminal resistance in comparison to the battery's internal resistance, the more marked these differences become.
The following diagram shows how differences in voltage detected result from differences in distance when measuring a lead-acid battery.

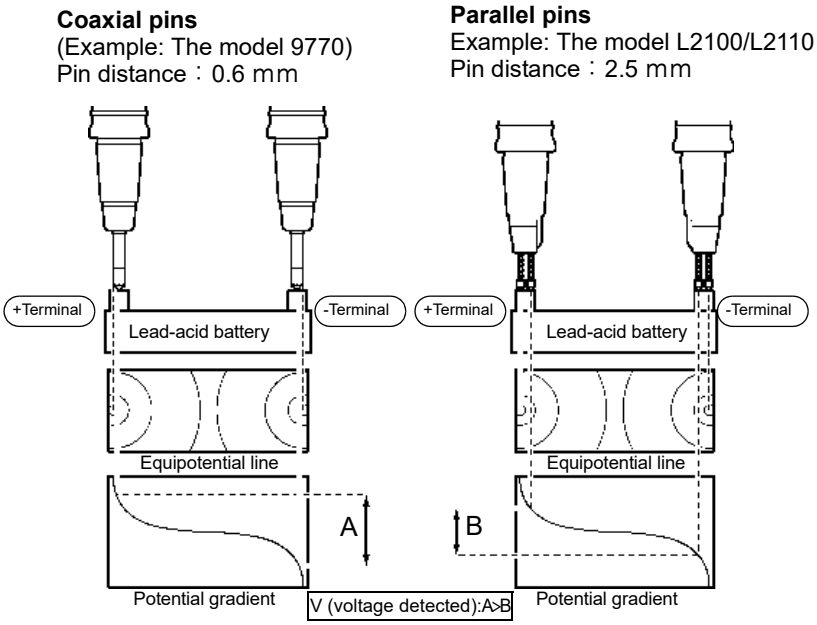

Appendix 4 Synchronous Detection System

The figure below shows an equivalent circuit for a battery. If the measured object exhibits other electrical characteristics in addition to resistance, as shown in this figure, we can use the synchronous detection system to obtain the effective resistance of the object. This synchronous detection system is also used to separate faint signals from noise.

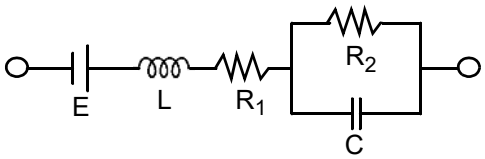

The synchronous detection system picks up the reference signal and those signals having the same phase components. The figure below gives a simplified schematic diagram of the synchronous detection system. The system consists of a multiplying circuit that multiplies two signals and a low-pass filter (LPF) that picks up only DC components from the output.

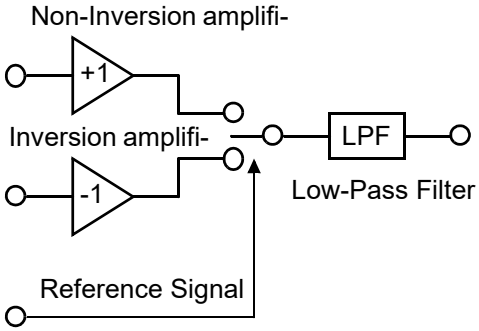

Given "v1," a reference signal voltage for the AC current generated in the instrument, and "v2," the signal voltage for use in synchronous detection, these parameters may be expressed by the equation given below. θ of v2 shows the phase difference against v1 and is generated by the reactance.

$v1 = A\sin\omega t$

$v2 = B\sin(\omega t + \theta)$

When synchronous detection is applied to both v1 and v2, they are expressed as follows:

$v1 \times v2 = 1/2AB\cos\theta - 1/2AB\cos(2\omega t + \theta)$

The first term indicates effective resistance. The second term is attenuated by the LPF. The instrument displays the first term.

Appendix 5 Configuration and Extension of the Test Leads

The test lead extension is normally performed by Hioki. If you want extension performed, contact your authorized Hioki distributor or reseller.
Observe the following points when extending test leads:

- Use the thickest lead available. Extend the lead only by the necessary amount.
- Maintain the AC four-terminal configuration while extending the lead. Changing the four-terminal configuration to a two-terminal configuration can result in measurement data being affected by lead resistance and/or contact resistance, resulting in inaccurate measurement.
- Make the branch section as short as possible. Try to extend the thick lead instead.
- While measuring, avoid as much as possible pulling or repositioning the test leads after executing zero adjustment.
- Extending test leads may result in excessive voltage drop. The total resistance of the test leads and contacts must remain below 20 Ω.
- To prevent eddy currents from affecting measurement, keep test leads away from metallic parts.
- After extending the test leads, confirm proper measurement operation and accuracy.

Reducing Induced Voltage

Since the instrument measures a minute resistance with AC power, it is affected by induced voltage. Induced voltage refers to voltage that allows the current generated in the instrument to build an inductive coupling in a lead and affect signal lines. Since the phase of the induced voltage is shifted from that of the AC current (reference signal) by 90 degrees, it can be eliminated with the synchronous detection circuit if the voltage is low. But for high levels, the induced voltage distorts the signals, causing incorrect synchronous detection. The instrument monitors induced voltage internally and generates an abnormal measurement signal if the level rises above a certain level. Reducing the length of the lead will lower induced voltage. Reducing the length of the branched section is particularly effective.

Appendix 6 Effect of Eddy Currents

The AC current generated in the instrument induces eddy currents in the surrounding metallic plates, which generate induced voltage in the test lead. Since the phase of this induced voltage is shifted from that of the AC current (reference signal) by 180 degrees, it cannot be eliminated by the synchronous detection circuit, resulting in measurement errors. The influence of eddy currents is a phenomenon unique to ohmmeters that measure resistance with AC power. To protect the test lead from such effects, keep metallic parts, including metallic plates, at a suitable distance from the test lead (branched section).

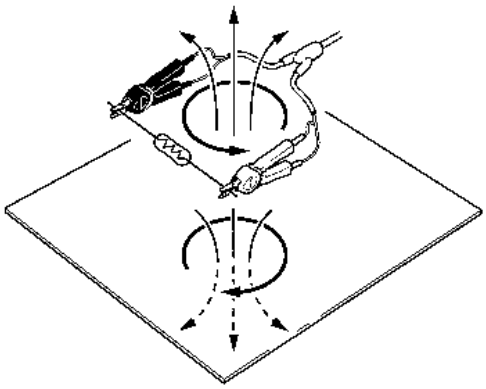

Appendix 7 Calibration Procedure

For the calibration environment, see Section "Guaranteed accuracy conditions" (⇒ p.168) of "9.3 Accuracy".

Calibration of the Ohmmeter

- Use the 9453 Four Terminal Lead as the connection lead.
- Use standard resistors with excellent temperature characteristics that resist deterioration over time.
- To prevent influence by the lead, use four-terminal resistors (Non-inductive type).
- Use a resistor that will reflect the correct resistance at 1 kHz. With wire-wound resistors, the inductance element is so large that the pure resistance (DC resistance) does not equal the effective resistance (real part of impedance, displayed on the instrument).
- For connection of a standard resistor to the instrument, see the figure below.

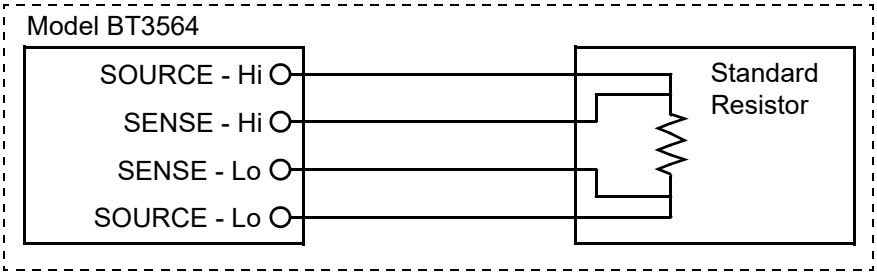

Calibration of the Voltmeter

- Use a generator that can output a DC voltage of 1000 V DC.
- For connection of a generator to the instrument, see the figure below.
- Do not apply an alternating current from the instrument to the generator, as the generator may malfunction.
- Use a low-impedance voltage source.
- The instrument may not operate properly with some generators.

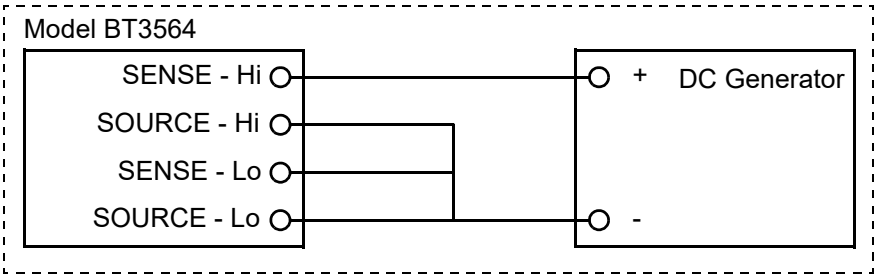

Appendix 8 Zero Adjustment

Zero adjustment is a function which adjusts the zero point by deducting the residual value obtained during 0 Ω measurement. For this reason, zero adjustment must be performed when connection is made to 0 Ω. However, connecting a sample with no resistance is difficult and therefore is not practical.
In this respect, when performing the actual zero adjustment, create a pseudo connection to 0 Ω and then adjust the zero point.

To create 0 Ω connection state

If an ideal 0 Ω connection is made, the voltage between SENSE-H and SENSE-L becomes 0 V according to the Ohm's Law of $E = I \times R$. In other words, if you set the voltage between SENSE-H and SENSE-L to 0 V, this gives you the same state of 0 Ω connection.

To perform zero adjustment using the instrument

The instrument uses a measurement fault detection function to monitor the state of connection between the four measurement terminals. For this reason, when performing zero adjustment, you need to make connections between the terminals appropriately in advance (Figure 1).

First, short between SENSE-H and SENSE-L to set the voltage between SENSE-H and SENSE-L to 0 V. If lead resistances R_{SEH} and R_{SEL} of the cable are less than few Ω, there will be no problem. Because the SENSE terminal is a voltage measurement terminal, almost no current I_0 flows. Therefore, in the $E = I_0 \times (R_{SEH} + R_{SEL})$ formula, $I_0 \approx 0$ is achieved; if lead resistances R_{SEH} and R_{SEL} are less than few Ω, voltage between SENSE-H and SENSE-L will become almost zero.
Next, make connection between SOURCE-H and SOURCE-L. This is to avoid display of error when no measurement current flows through.

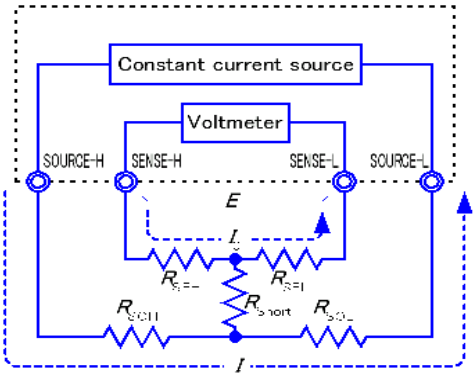

$$E = (I_0 \times R_{SEL}) + (I_0 \times R_{SEH})$$
$$= (0 \times R_{SEL}) + (0 \times R_{SEH})$$
$$= 0 \text{ [V]}$$

Figure 1 Pseudo connection to 0 Ω

Lead resistances R_{SOH} and R_{SOL} of the cable must be less than the resistance for flowing measurement current.
Furthermore, if you also monitor the connection between SENSE and SOURCE, you need to make connection between SENSE and SOURCE. If lead resistance R_{Short} of the cable has only few Ω, there will be no problem.
If you wire in the way described above, measurement current I flowing out from SOURCE-H will go to SOURCE-L but not to the lead of SENSE-H or SENSE-L. This enables the voltage between SENSE-H and SENSE-L to be kept accurately at 0 V, and appropriate zero adjustment becomes possible.

To perform zero adjustment appropriately

Table 1 shows the correct and wrong connections. The resistances in the figure indicate lead resistances; there will be no problem if they are less than few Ω respectively.
In (a), if you connect SENSE-H and SENSE-L as well as SOURCE-H and SOURCE-L respectively, and use one path to make connection between SENSE and SOURCE, no potential difference occurs between SENSE-H and SENSE-L, and 0 V is input. This enables zero adjustment to be carried out correctly.
In (b), on the other hand, if you connect SENSE-H and SOURCE-H as well as SENSE-L and SOURCE-L respectively, and use one path to make connection between Hi and Lo, $I \times R_{Short}$ voltage occurs between SENSE-H and SENSE-L. For this reason, the pseudo 0 Ω connection state cannot be achieved and zero adjustment cannot be carried out correctly.

Table 1: Connection methods

Connection method	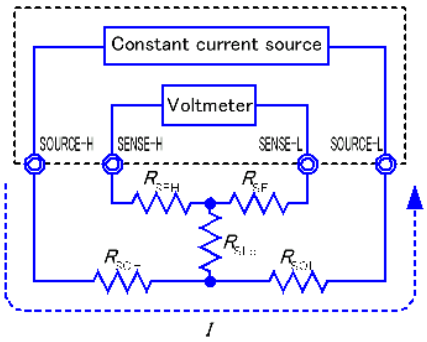 (a) Use one point each between SENSE and SOURCE for connection	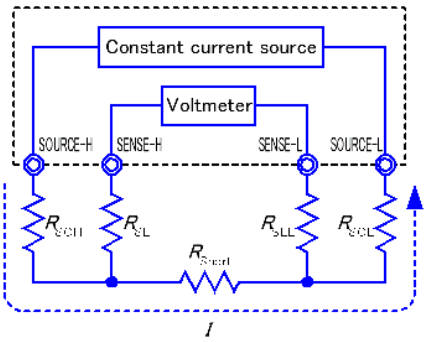 (b) Use one point each between Hi and Lo for connection
Resistance between SENSE-H and SENSE-L	$R_{SEH} + R_{SEL}$	$R_{SEH} + R_{Short} + R_{SEL}$
Measurement current I's flow path	$R_{SOH} \rightarrow R_{SOL}$	$R_{SOH} \rightarrow R_{Short} \rightarrow R_{SOL}$
Voltage occurring between SENSE-H and SENSE-L	0	$I \times R_{Short}$
As connection method for zero adjustment	Correct	Wrong

To perform zero adjustment using a probe

When you actually perform zero adjustment using a probe, you may unexpectedly make the connection shown in Table 1 (b). Therefore, when performing zero adjustment, you need to pay sufficient attention to the connection state of each terminal.
Here, L2107 Clip Type Leads as mentioned in " Executing Zero-Adjustment" (⇒ p.31) is used as an example for the connection explanation. Table 2 shows the connection state of the tip of the lead and equivalent circuit in the respective correct and wrong connections. Table 1 (a) indicates the correct connection method, resulting in 0 V between SENSE-H and SENSE-L. However, Table 1 (b) is the wrong connection method, so that 0 V is not obtained between SENSE-H and SENSE-L.

Table 2: Clip type lead connection methods used during zero adjustment

Connection method	Correct 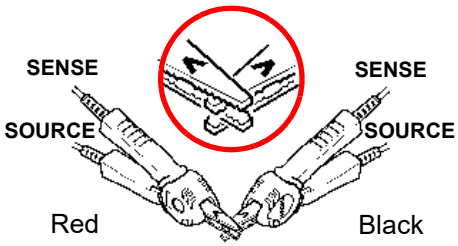 	Wrong 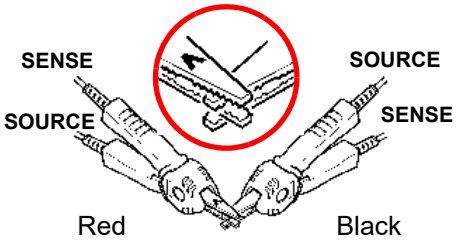
Tip of lead	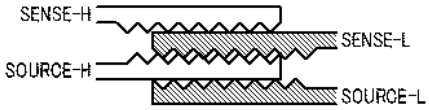 	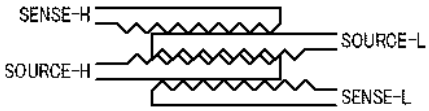
Equivalent circuit	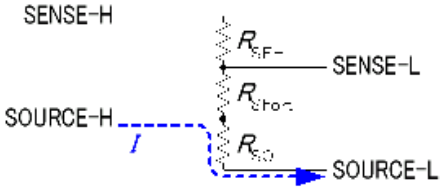 	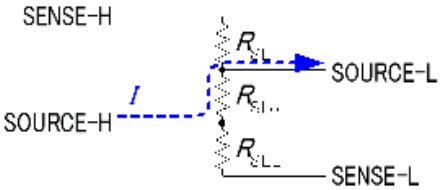
Deformed equivalent circuit	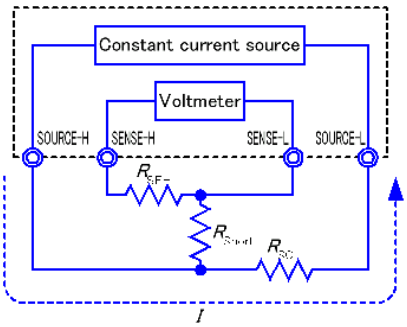 	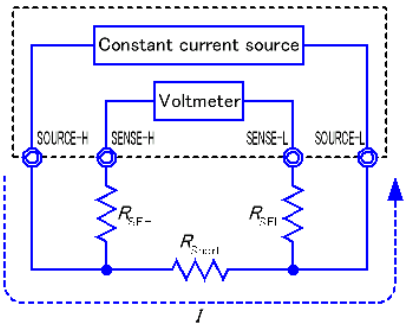
As connection method for zero adjustment	Correct	Wrong

To perform zero adjustment using Z5038 0 ADJ Board

When performing zero adjustment, you cannot use a metal board or similar object to replace Z5038 0 ADJ Board.
The zero adjustment board is used when performing zero adjustment of L2100, L2110 Pin Type Lead.
Table 3 shows cross sectional diagrams and equivalent circuits of the two connection methods: connecting Pin Type Lead to zero adjustment board, and connecting that to a metal board or similar object. Table 1 (a) indicates the connection using zero adjustment board, resulting in 0 V between SENSE-H and SENSE-L. However, Table 1 (b) is the connection using a metal board or similar object, so that 0 V is not obtained between SENSE-H SENSE-L.

Table 3: Pin type lead connection methods in zero adjustment

Connection method	 If connection is made using Z5038 0 ADJ Board	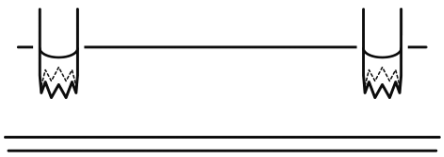 If connection is made using metal board or similar object
Tip of lead	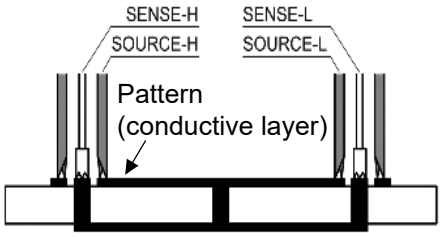	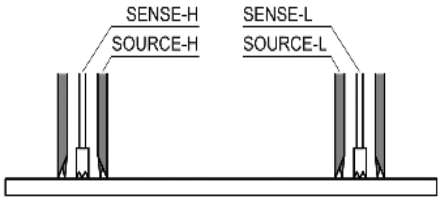
Equivalent circuit	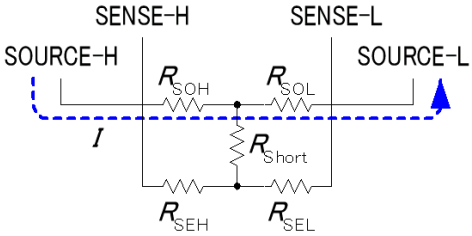	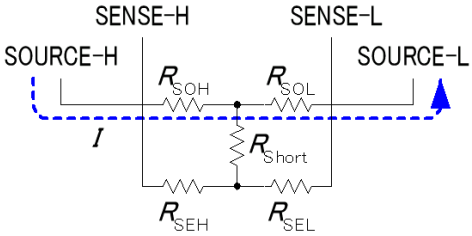
Deformed equivalent circuit	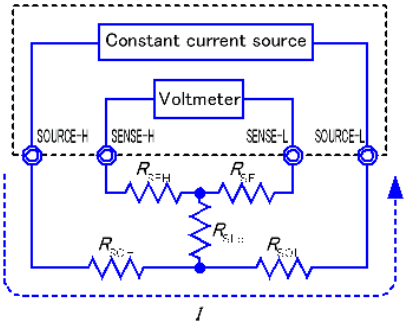	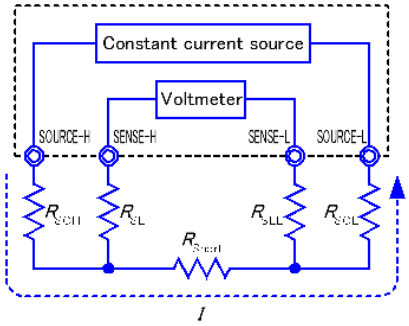
As connection method for zero adjustment	Correct	Wrong

If zero adjustment is difficult when using self-made probe to measure

When you perform zero adjustment using a self-made probe to do measurement, connect the tip of the self-made probe as shown in Table 1 (a). However, if such connection is difficult, you can try the following methods.

If DC resistance meter is used

The main purpose of performing zero adjustment is to remove offset of the measurement instrument. For this reason, the value to be deducted as a result of zero adjustment almost does not depend on the probe. Therefore, after using the standard probe to make the connection shown in Table 1 (a) and performing zero adjustment, you can replace it with a self-made probe to measure with offset removed from the measurement instrument.

If AC resistance meter is used

In addition to removing offset of the measurement instrument, another main purpose of performing zero adjustment is to remove influence of the probe shape. For this reason, when performing zero adjustment, try as much as possible to set the form of the self-made probe close to the measurement state. Then, you need to make the connection as shown in Table 1 (a) and perform zero adjustment.
However, if a Hioki product is used, even in AC resistance measurement, if the required resolution exceeds 100 μΩ, the same zero adjustment method used in DC resistance meter may be sufficient.

Appendix 9 Test Lead Options

⚠WARNING Use measurement leads at or below their rated voltage.

Model L2107 Clip Type Leads
(60 V DC or less)

These leads have clip tips. Four-terminal measurements are provided just by clipping on to the test object.
Maximum clip diameter: 8 mm

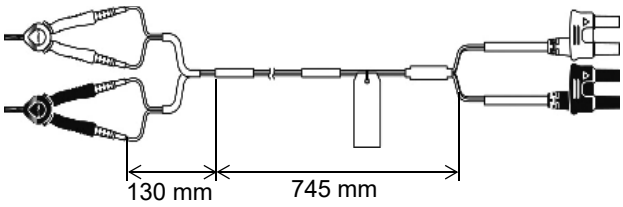

Model 9453 Four Terminal Lead
(60 V DC or less)

The SOURCE leads of this four-terminal lead set have covered alligator clips, and the SENSE leads have standard test probes. Use for measuring printed circuit board pattern resistance, and where SOURCE and SENSE leads need to be connected separately.
Bifurcation-to-probe length: approx. 300 mm
Plug-to-bifurcation length: approx. 800 mm

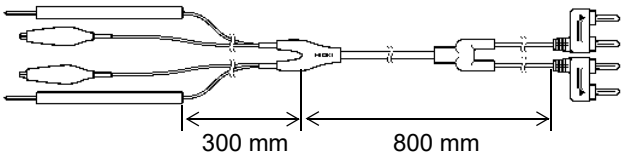

These leads are designed to attach to test object with large diameter contacts. Four-terminal measurements can be made just by clipping.
Bifurcation-to-probe length: approx. 250 mm
Plug-to-bifurcation length: approx. 850 mm
Maximum clip diameter: approx. 29 mm

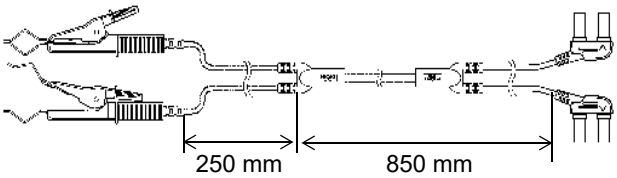

Even on flat contact points that cannot be clipped to, or on test objects with small contacts such as relay terminals or connectors, four-terminal measurements are available by just pressing.
Bifurcation-to-probe length: approx.250 mm
Plug-to-bifurcation length: approx.400 mm
Pin base: ϕ 1.8 mm

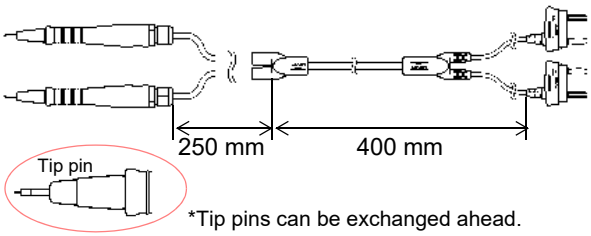

*Tip pins can be exchanged ahead.

Model 9771 Pin Type Lead
(60 V DC or less)

The tips have a four-terminal design developed for floating-foot testing of ICs mounted on boards. Resistance can be correctly measured even with small test objects.
Bifurcation-to-probe length: approx. 250 mm
Plug-to-bifurcation length: approx.400 mm
Between pin bases: 0.2 mm

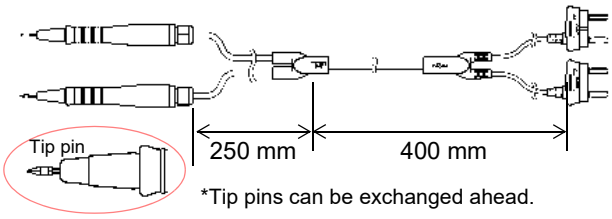

*Tip pins can be exchanged ahead.

Model L2100 Pin Type Lead
(1000 V DC or less)

These high-voltage pin-shaped leads incorporate a four-terminal design and can be used with up to 1000 V DC, making them ideal for use with high-voltage battery packs and cells with high input-to-ground voltages. The parallel two-pin type tips provide stable contact with the target object.

Bifurcation-to-probe length: approx. 300 mm
Plug-to-bifurcation length: approx. 850 mm
Between pin bases: 2.5 mm

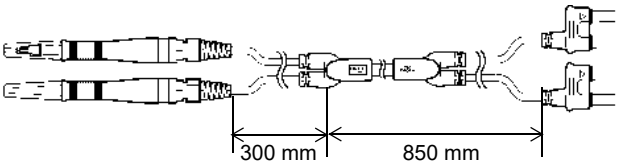

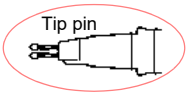

*Tip pins can be exchanged ahead.

Model L2110 Pin Type Lead
(1000 V DC or less)

These high-voltage pin-shaped leads incorporate a four-terminal design and can be used with up to 1000 V DC, making them ideal for use with high-voltage battery packs and cells with high input-to-ground voltages. The parallel two-pin type tips provide stable contact with the target object.

Bifurcation-to-probe length: approx. 750 mm
Plug-to-bifurcation length: approx. 850 mm
Between pin bases: 2.5 mm

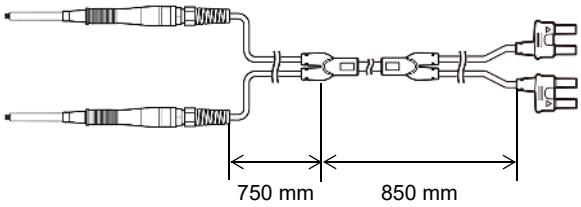

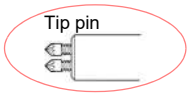

*Tip pins can be exchanged ahead.

Appendix 10 Rack Mounting

By removing the screws on the sides, this instrument can be installed in a rack mounting plate.

⚠WARNING

Observe the following precautions regarding the mounting screws to avoid instrument damage and electric shock accidents.

- When installing the Rack Mounting Plate, the screws must not intrude more than 6 mm into either side of the instrument.
- When removing the Rack Mounting Plate to return the instrument to stand-alone use, replace the same screws that were installed originally. (Feet: M3 x 6 mm, Sides: M4 x 6 mm)

Rack Mounting Plate Template Diagram and Installation Procedure

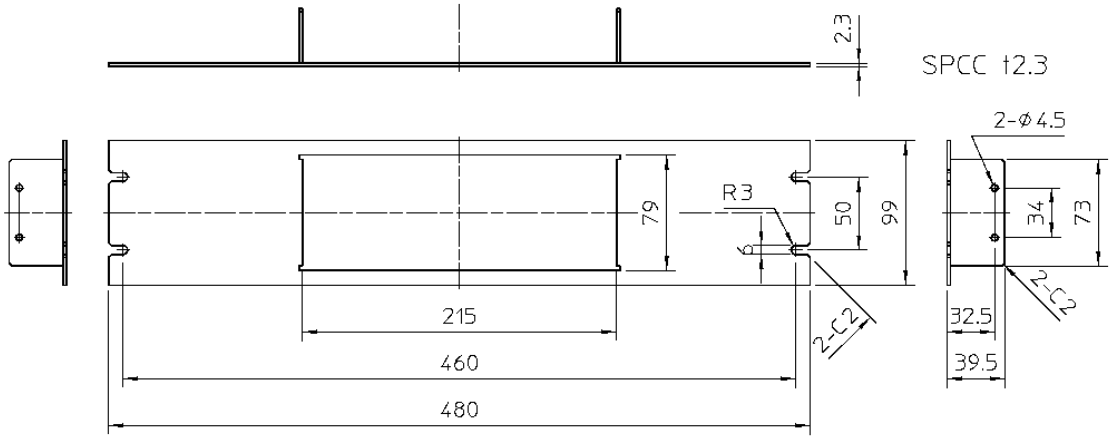

Rack Mounting Plate (JIS)

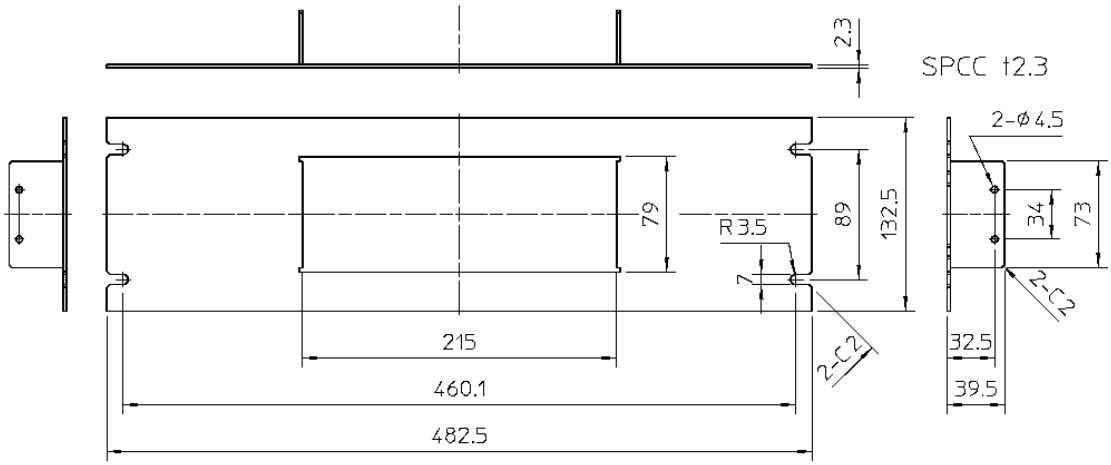

Rack Mounting Plate (EIA)

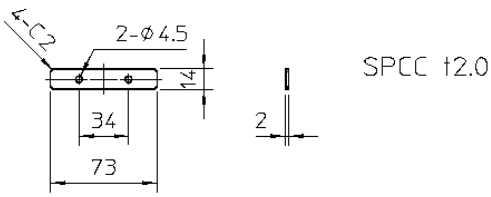

Spacer (Two Required)

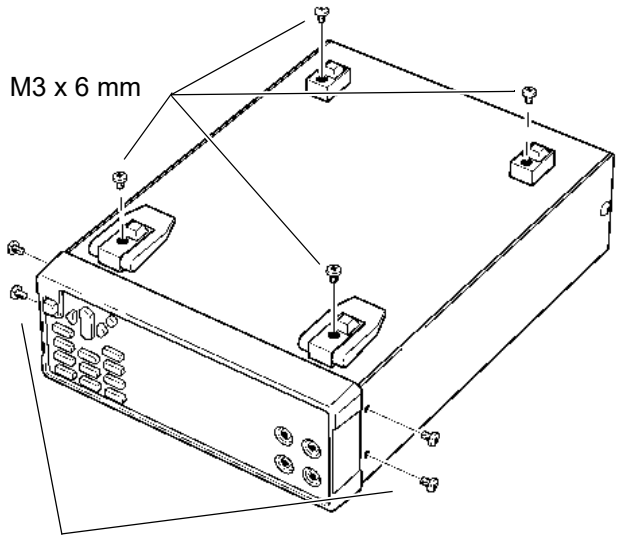

1. Remove the feed from the bottom of the instrument, and the screws from the sides (four near the front).

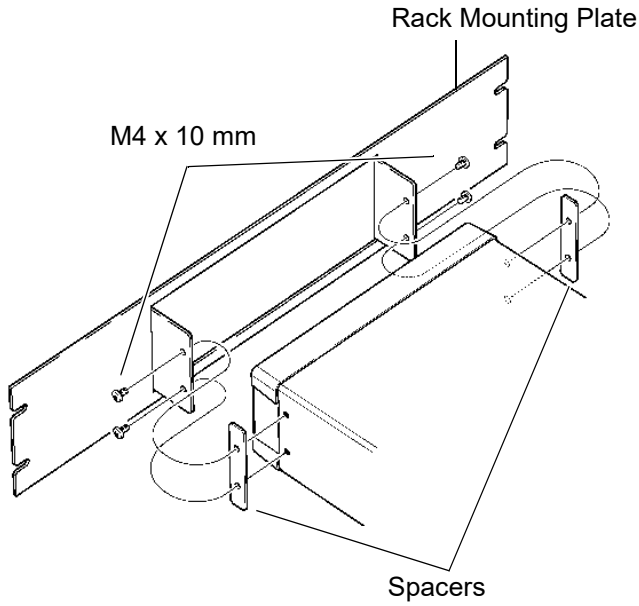

2. Installing the spacers on both sides of the instrument, affix the Rack Mounting Plate with the M4 x 10 mm screws.

When installing into the rack, reinforce the installation with a commercially available support stand.

Appendix 11 Dimensional Diagram

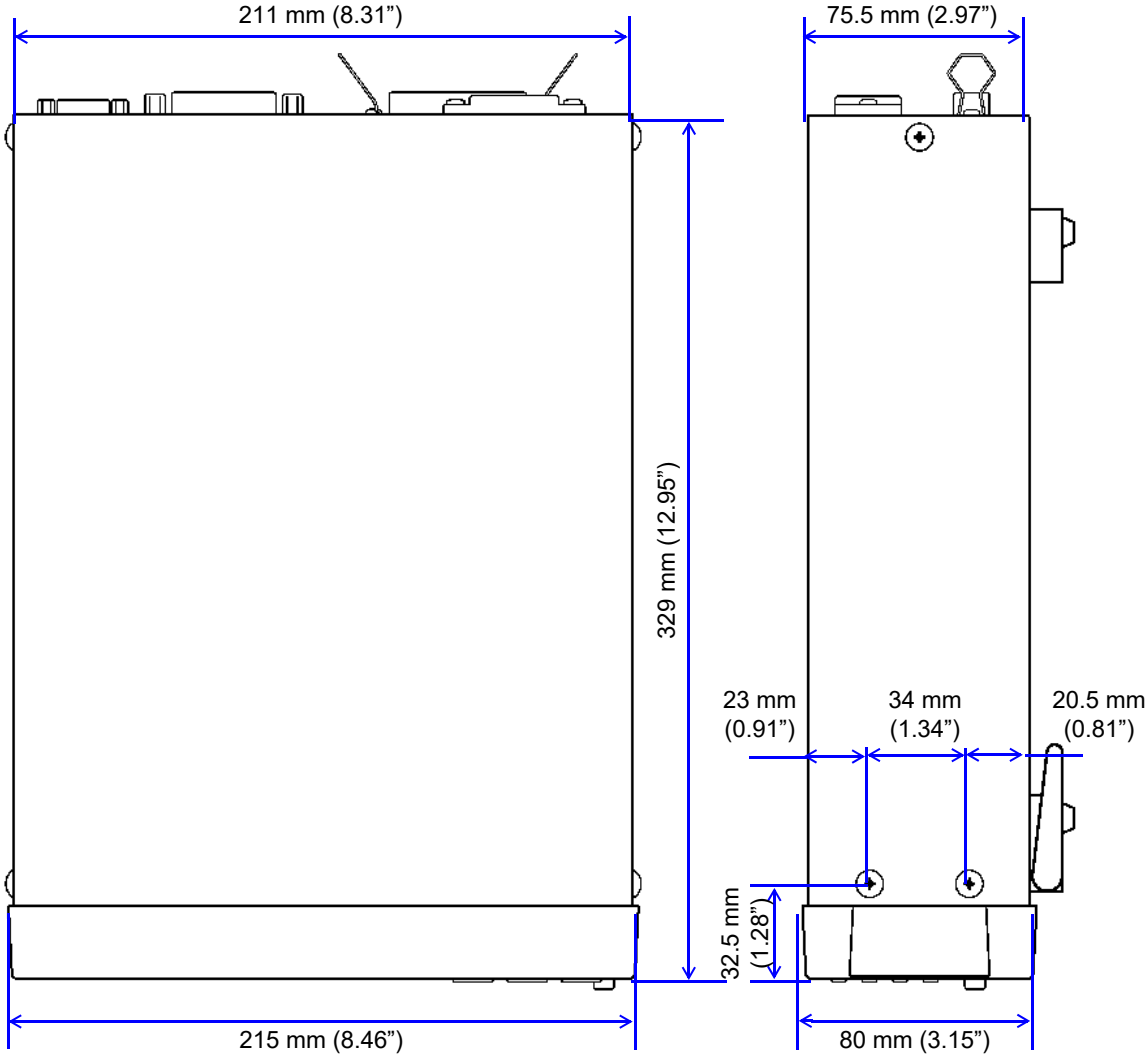

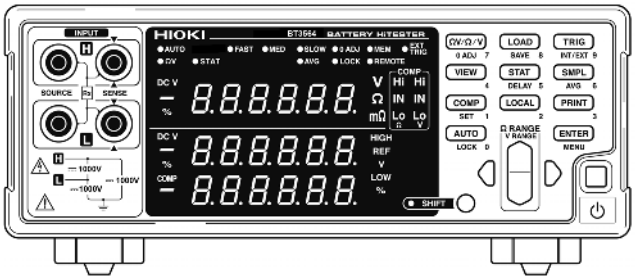

Appendix

Index

Numerics

0ADJ 78
3560 152

A

AC four-terminal method A4
Accuracy 168
Analog output 93
Auto-Ranging 11
Averaging 11, 59

C

CAL 69, 77
Calibration A9
Character data 104
Cleaning 175
Clearing statistical calculation results 61
Command 101
Communication condition 100
Comparator 11, 54
Comparator function 40
Comparator judgment beeper 50
Comparator mode 50, 78
Compare 40
Compatible command 152
Connector 76, 98
Continuous measurement 145
CR 103
CR+LF 103
Sample program
  Creation procedure 158
Crossover cable 99
Custom test lead A1

D

Damage 173
Data Format 104
Decimal numeric data 104
Device-specific command 113, 123
dgt. 3, 168
Displayed value 29

E

EOI 103
EOM 78, 80, 82
ERR 78
Error Indication 175
EXT I/O connector 12, 76
External control 75, 86
  Q&A 86
External trigger 57, 81

F

Factory defaults 72
Footswitch 70
Format 151
Four-terminal measurement A5
Free-run 57, 86
Fuse 173

G

GP-IB 95
GP-IB connector 12
Ground 6, 16

H

Header 102

I

INDEX 78
Initialize 72
Input buffer 105
Input terminal 9
Inspection 21
Interface 89, 100
Internal circuitry 83
Internal trigger 57, 81
Interval printing 89, 90

J

Judge 40
Judgment beeper 50
Judgment results 55, 78

K

Key beeper 71
Key-Lock 11, 66

L

LF 103
Line frequency 16, 20
LOAD 68, 77
Local 110, 111, 141

M

Main display 9, 10
Main power switch 12
MANU 78
Manual range 11
Mean 60
Measured current 29, 169
Measurement fault 36, 55, 78, 79, 80, 151, 156
Measurement mode 11, 26
Measurement precision 69
Measurement range 27
Measurement setting state 67, 68
Measurement time 82
Measurement value output 70
Memory function 64, 137
Menu display 13

N

Noise 4, 6, 141, 173
NR1 104
NR2 104
NR3 104

O

OF 37
Operating key 9, 11
Option 2, A15
Output queue 105
Overflow 37

P

Panel load 68
Panel save 67
PASS 55, 78
Power cord 16, 21
Power inlet 12
Power supply frequency 6, 16, 20, 165
Power supply voltage 6, 18, 165
POWER switch 9
PRINT 78
Printer 11, 87
Printing statistical calculation results 90
Process capability index 60

Q

Query 101

R

Rack mounting A17
Range 11, 27
rdg. 3, 168
Reference value and tolerance 51, 52
Relative value 51
Remote 11, 66, 110, 111, 141
Repair 173
Reset 72, 173
Resistance and voltage measurement 26
Resistance measurement 26
RS-232C 95
RS-232C connector 12

S

Sample program 158, 160, 162
Sampling 69
Sampling rate 11, 30
Self calibration 69, 168, 170
SENSE-H 9, A1
SENSE-L 9, A1
Separator 103
σn 53, 60
σn-1 60
SOURCE-H 9, A1
SOURCE-L 9, A1
Stand 12
Standard command 112, 119
Standard deviation of population 60
Statistical calculation 11, 60
Sub display 9, 10

T

Temperature coefficient 169
Terminator 103
Test lead 17, 21, 30, A1, A15
Threshold method 51
Timing chart 81
TRIG 57, 62, 64, 70, 77
Trigger 11, 57, 145
Trigger delay 11, 58
Trigger source 145
Turning the power off 18
Turning the power on/off 18

U

Upper and lower thresholds 51, 52

V

Voltage measurement 26

W

Warm-up 5, 18, 69, 168

Z

Zero-Adjustment 11, 30, 34, A10

4
Index

Warranty Certificate

HIOKI

Model	Serial number	Warranty period Three (3) years from date of purchase (___ / ___)

Customer name: _____

Customer address: _____

Important

- Please retain this warranty certificate. Duplicates cannot be reissued.
- Complete the certificate with the model number, serial number, and date of purchase, along with your name and address. The personal information you provide on this form will only be used to provide repair service and information about Hioki products and services.

This document certifies that the product has been inspected and verified to conform to Hioki's standards.
Please contact the place of purchase in the event of a malfunction and provide this document, in which case Hioki will repair or replace the product subject to the warranty terms described below.

Warranty terms

1. The product is guaranteed to operate properly during the warranty period (three [3] years from the date of purchase). If the date of purchase is unknown, the warranty period is defined as three (3) years from the date (month and year) of manufacture (as indicated by the first four digits of the serial number in YYMM format).
2. If the product came with an AC adapter, the adapter is warrantied for one (1) year from the date of purchase.
3. The accuracy of measured values and other data generated by the product is guaranteed as described in the product specifications.
4. In the event that the product or AC adapter malfunctions during its respective warranty period due to a defect of workmanship or materials, Hioki will repair or replace the product or AC adapter free of charge.
5. The following malfunctions and issues are not covered by the warranty and as such are not subject to free repair or replacement:
   - -1. Malfunctions or damage of consumables, parts with a defined service life, etc.
   - -2. Malfunctions or damage of connectors, cables, etc.
   - -3. Malfunctions or damage caused by shipment, dropping, relocation, etc., after purchase of the product
   - -4. Malfunctions or damage caused by inappropriate handling that violates information found in the instruction manual or on precautionary labeling on the product itself
   - -5. Malfunctions or damage caused by a failure to perform maintenance or inspections as required by law or recommended in the instruction manual
   - -6. Malfunctions or damage caused by fire, storms or flooding, earthquakes, lightning, power anomalies (involving voltage, frequency, etc.), war or unrest, contamination with radiation, or other acts of God
   - -7. Damage that is limited to the product's appearance (cosmetic blemishes, deformation of enclosure shape, fading of color, etc.)
   - -8. Other malfunctions or damage for which Hioki is not responsible
6. The warranty will be considered invalidated in the following circumstances, in which case Hioki will be unable to perform service such as repair or calibration:
   - -1. If the product has been repaired or modified by a company, entity, or individual other than Hioki
   - -2. If the product has been embedded in another piece of equipment for use in a special application (aerospace, nuclear power, medical use, vehicle control, etc.) without Hioki's having received prior notice
7. If you experience a loss caused by use of the product and Hioki determines that it is responsible for the underlying issue, Hioki will provide compensation in an amount not to exceed the purchase price, with the following exceptions:
   - -1. Secondary damage arising from damage to a measured device or component that was caused by use of the product
   - -2. Damage arising from measurement results provided by the product
   - -3. Damage to a device other than the product that was sustained when connecting the device to the product (including via network connections)
8. Hioki reserves the right to decline to perform repair, calibration, or other service for products for which a certain amount of time has passed since their manufacture, products whose parts have been discontinued, and products that cannot be repaired due to unforeseen circumstances.

HIOKI E.E. CORPORATION
http://www.hioki.com 18-07 EN-3

HIOKI

All regional contact information

HIOKI E.E. CORPORATION
81 Koizumi, Ueda, Nagano 386-1192 Japan

2402 EN

Edited and published by HIOKI E.E. CORPORATION

Printed in Japan

・Contents subject to change without notice.
・This document contains copyrighted content.
・It is prohibited to copy, reproduce, or modify the content of this document without permission.
・Company names, product names, etc. mentioned in this document are trademarks or registered trademarks of their respective companies.

Europe only

・EU declaration of conformity can be downloaded from our website.
・Contact in Europe: HIOKI EUROPE GmbH
Helfmann-Park 2, 65760 Eschborn, Germany