F038 series Dustproof&waterproof Slip Rings



IP grade: IP68,solid,OD:38mm

SenRing F038 series Waterproof slip ring ,OD38mm,maximum IP:IP68,can conduct electricity and transfer various signals when 360° roating underwater 300M,anti-corrosion,acid and alkali resistance stainless steel housing make sure work stably in all kinds of bad environment, specially used for conducting or transmitting video and various control signals in special equipment such as ships, oil Wells and submersibles.

Part No. Description

F038 - power circuits - signal circuits - Product grade

F038 series waterproof slip ring solid without hole,OD 38mm

Examples:
0610:6 circuits@10A
1210:12 circuits@10A

C:standard
D:industrical

Examples:
06S:6 circuits signal@2A(5A options)
12S:12 circuits signal@2A(5A options)

Examples

F038-06S: F038 series Dustproof & waterproof slip ring(solid ,OD:38mm),06S means 6 circuits signal(2A each);
F038-0210-06S: F038 series Dustproof & waterproof slip ring(solid, OD:38mm),0210 means 2 circuits current(10A each),06S means 6 circuits signal(2A each).

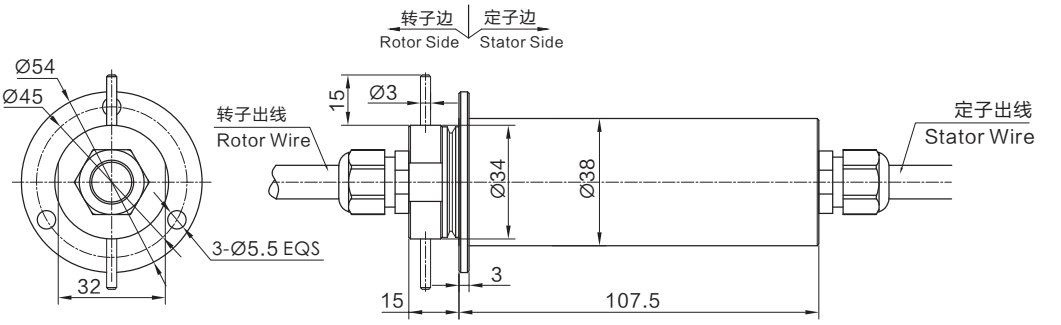

Model List

Model	Circuit/Signal no.				Length L(mm)
	2A	5A	10A	20A	
F038-0410	0	0	4	0	107.5
F038-0605	0	6	0	0	107.5
F038-0220	0	0	0	2	107.5
F038-36S	36	0	0	0	107.5
F038-56S	56	0	0	0	107.5

Technical Specification of the slip ring

Mechanical Data		Electrical Data		
spec	data	spec	data	
Rotating speed	refer to slip ring grade table	voltage range	0~240VAC/VDC	0~240VAC/VDC
working temp.	-40℃~85℃	insulation resistance	⩾500MΩ/500VDC	⩾500MΩ/500VDC
IP grade	Ip68	lead wire spec.	AWG17#UL Teflon	AWG22#UL Teflon
contact material	refer to slip ring grade table	lead wire length	standard 300mm (can be customized)	
housing material	stainless steel	Dielectric Strength	500VAC@50Hz,60s	
certificate	RoHS certificate	Electrical noise	<0.01Ω	
		CE certificate	Yes	

Grade code

Grade code	Max rotating speed	working life	contact material
C:standard	100RPM	10 millions	precious metal
D:industrical	200RPM	30 millions	gold-gold

Color Code of Lead Wire

ring #	1	2	3	4	5	6	7	8	9	10	11	12
color	BLK	BRN	RED	ORG	YEL	GRN	BLU	PUR	GRY	WHT	PINK	LGT BLU

ring#	13	14	15	16	17	18	19	20	21	22	23	24
color	WHT/BLK	WHT/BRN	WHT/RED	WHT/ORG	WHT/YEL	WHT/GRN	WHT/BLU	WHT/PUR	WHT/GRY	BLK/RED	BLK/BRN	Transparent

Remark: "1" : the first wire from rotor side , F038-06S wire color sequence:BLK/BRN/RED/ORG/YEL/G
-RN , 24 color wires as one group , if more than 24wires, repeat as sequence , use number tube to tell group 1#, 2#....